EdLoop

EdLoop JEE

PHYSICS · JEE MAIN

Alternating Current

Previous Year Questions with answers

173 questions · **127** papers · **2002–2026** · newest paper first

Step-by-step solutions for every question: free in the EdLoop JEE app (Google Play) · pyq.edloop.in

What is in this PDF: every Alternating Current question we hold from past JEE Main and AIEEE papers, with its options and answer. Where an answer comes from a source other than the official final key, it says so next to the answer.

Step-by-step solutions for every question are free in the EdLoop JEE app (Google Play) and on app.edloop.in. More chapters: pyq.edloop.in/free-pdfs/

EdLoop

Chapter at a glance

3.1%	173	108 of 162	117 / 56
of Physics questions, 2019–2026	questions, 2002–2026	papers asked it, 2019–2026	MCQ / numerical, 2002–2026

Trend. Steady: 0.8 questions per paper in 2024–2026 against 0.9 in 2019–2023.

Questions per year

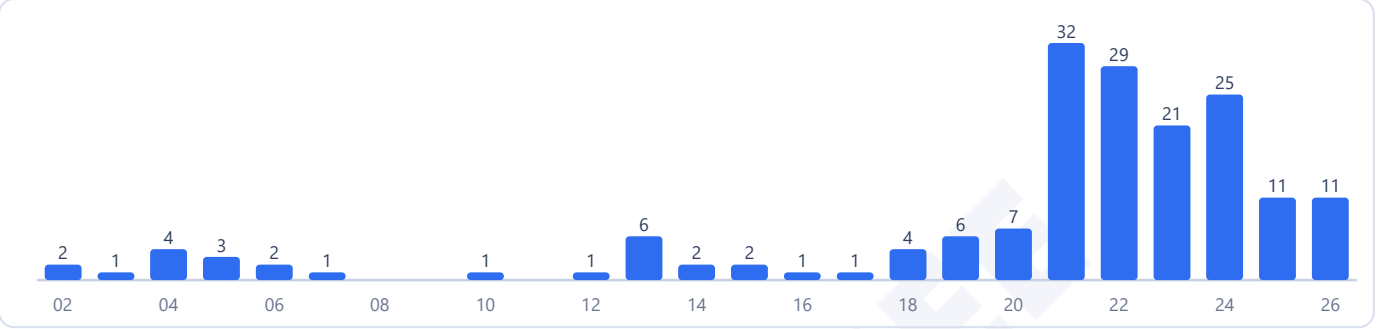

Counts are the questions we hold: 173 in 127 papers. No question in this chapter was found repeated across papers.

Most-asked topics in this chapter (2002–2026)



How often it comes up

Alternating current deals with sinusoidal voltages and reactive components under Unit 14: Electromagnetic Induction and Alternating Currents in the Class 12 syllabus, holding rank 18 among the 29 physics chapters. In the computerized exam period from 2019 to 2026, 142 alternating current problems were asked in 162 papers, representing an average rate of 0.9 questions per shift. The chapter featured in 108 of those 162 papers, and questions have appeared every year throughout this testing era. During the recent 2024 to 2026 examination seasons, candidates encountered 47 questions across 58 papers, giving 0.8 questions per paper and a 3.0 percent subject share. The chapter's share is up compared to the 2002 to 2018 testing window, which logged 31 questions across 38 papers for a 2.3 percent share. Relative to the full 2019 to 2026 baseline, its recent share has stayed about the same. In 2026 alone, 11 questions were presented across 19 papers, showing up in 10 test sessions. A total of 56 questions between 2019 and 2026 appeared as numerical answer questions, meaning students regularly calculate resonance frequencies, impedance values, and power factors to exact numerical figures.

Most-asked topics

The question distribution focuses heavily on series resonance circuits alongside foundational AC quantities:

- **LCR Circuits**: 109 total questions since 2002, with 88 appearing between 2019 and 2026, tested up to 2026. This topic forms the core of the chapter, covering series LCR resonance, impedance triangles, inductive and capacitive reactance, phase angles, power factor, quality factor, and bandwidth.
- **AC Basics**: 36 questions overall, including 32 from 2019 to 2026, asked in 2026. Problems evaluate root mean square and average current definitions, non-sinusoidal waveforms like linear ramps, phase differences between voltage and current across pure elements, and average power consumption.
- **Transformer & Generator**: 28 lifetime questions, with 22 between 2019 and 2026, continuing into 2026. Questions explore step-up and step-down transformers, voltage and turns ratios, power transmission line

efficiency, generator loop rotations in magnetic fields, and induced alternating electromotive force.

What the questions look like

JEE Main tests alternating current primarily through formulaic circuit calculations and phasor geometry:

- **Series resonance parameter extraction**: A series circuit containing specified resistor and inductor values draws peak current at a given angular frequency. Students use the resonance condition to find the unknown capacitance.
- **Impedance and power factor**: Circuits with given resistances and reactances require calculating the power factor cos phi, often formatted as an algebraic fraction or decimal.
- **Transmission line power losses**: A generator delivers electric power to a distant load through a two-wire line of known resistance. Questions evaluate transmission efficiency and joule heating losses along the cables.
- **Root mean square integration**: Deriving the root mean square value of custom current waveforms, such as currents that grow linearly from zero to a peak value across a single period.

How to practise it

Master the phasor representation of series LCR circuits. Remember that current is identical through all series elements, while the voltage across an inductor leads the current by ninety degrees and the voltage across a capacitor lags by ninety degrees.

Practice using the impedance triangle to find total circuit impedance Z and phase angle phi. Because average power equals root mean square voltage multiplied by root mean square current multiplied by the power factor, calculating the cosine of the phase angle is central to most questions.

Pay special attention to series resonance. At resonance, capacitive and inductive reactances cancel out, impedance reaches its minimum value equal to the pure ohmic resistance, current attains its maximum amplitude, and the power factor equals unity.

EdLoop JEE

Q1 JEE Main 2026 · 6 Apr · Shift 1 MCQ

A LCR series circuit driven with $E_{rms} = 90$ V at frequency $f_d = 30$ Hz has resistance $R = 80\ \Omega$, an inductance with inductive reactance $X_L = 20.0\ \Omega$ and capacitance with capacitive reactance $X_C = 80.0\ \Omega$. The power factor of the circuit is _____.

(A) 0.8
(B) 0.64
(C) 0.9
(D) 0.5

Answer: (A) 0.8 · Official NTA final key

Q2 JEE Main 2026 · 5 Apr · Shift 1 MCQ

An a.c. source of angular frequency ω is connected across a resistor R and a capacitor C in series. The current is observed as I. Now the frequency of the source is changed to $\omega/4$, (keeping the voltage unchanged) the current is found to be $I/3$. The ratio of resistance to reactance at frequency ω is

(A) $\sqrt{\frac{6}{7}}$
(B) $\sqrt{\frac{3}{5}}$
(C) $\sqrt{\frac{7}{8}}$
(D) $\sqrt{\frac{3}{4}}$

Answer: (C) $\sqrt{\frac{7}{8}}$ · Official NTA final key

Q3 JEE Main 2026 · 5 Apr · Shift 2 Numerical

A series LCR circuit with $R = 20\ \Omega$, $L = 1.6$ H and $C = 40\ \mu$F is connected to a variable frequency a.c. source. The inductive reactance at resonant frequency is _____ Ω.

Numerical value type: the answer is a number.

Answer: 200. · Official NTA final key

Q4 JEE Main 2026 · 4 Apr · Shift 1 Numerical

An inductor of 10 mH, capacitor of 0.1 μF and a resistor of 100 Ω are connected in series across an a.c power supply 220 V, 70 Hz. The power factor of the given circuit is 0.5. The difference in the inductive reactance and capacitance reactance is $\sqrt{3}\,\alpha\ \Omega$. The value of α is _____.

Numerical value type: the answer is a number.

Answer: 100. · Official NTA final key

Q5 JEE Main 2026 · 2 Apr · Shift 2 MCQ

The figure given below shows an LCR series circuit with two switches S_1 and S_2. When switch S_1 is closed keeping S_2 open, the phase difference (ϕ) between the current and source voltage is 30° and phase difference is 60° when S_2 is closed keeping S_1 open. The value of $(3L_1 - L_2)$ is _____ H.

(see the figure above)

The figure given below shows an LCR series circuit with two switches S_1 and S_2. When switch S_1 is closed keeping S_2 open, the phase difference (ϕ) between the current and source voltage is 30° and phase difference is 60° when S_2 is closed keeping S_1 open. The value of $(3L_1 - L_2)$ is _____ H.

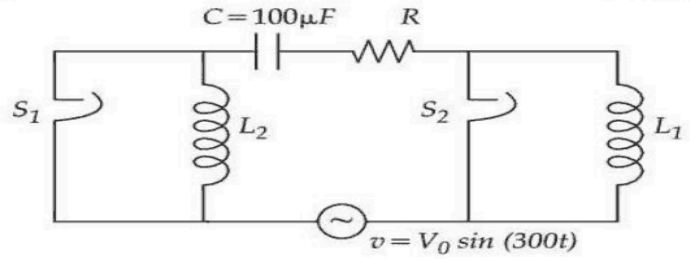

Options :

691121660. $\frac{9}{2}$

691121661. $\frac{2}{9}$

691121662. $\frac{1}{3}$

691121663. 3

(A) $\frac{9}{2}$
(B) $\frac{2}{9}$
(C) $\frac{1}{3}$
(D) 3

Answer: (B) $\frac{2}{9}$ · Official NTA final key

Q6 JEE Main 2026 · 28 Jan · Shift 1 MCQ

The electric current in the circuit is given as $i = i_o(t/T)$. The r.m.s current for the period $t = 0$ to $t = T$ is _____.

(A) i_o
(B) $\frac{i_o}{\sqrt{6}}$
(C) $\frac{i_o}{\sqrt{2}}$
(D) $\frac{i_o}{\sqrt{3}}$

Answer: (D) $\frac{i_o}{\sqrt{3}}$ · Official NTA final key

Q7 JEE Main 2026 · 28 Jan · Shift 2 Numerical

An inductor stores 16 J of magnetic field energy and dissipates 32 W of thermal energy due to its resistance when an a.c. current of 2 A (rms) and frequency 50 Hz flows through it. The ratio of inductive reactance to its resistance is _____. (π=3.14)

Numerical value type: the answer is a number.

Answer: 314. · Official NTA final key

Q8 JEE Main 2026 · 24 Jan · Shift 1 MCQ

For the series LCR circuit connected with 220 V, 50 Hz a.c source as shown in the figure, the power factor is $\frac{\alpha}{10}$. The value of α is _____.

(see the figure above)

Q.28 For the series LCR circuit connected with 220 V, 50 Hz a.c source as shown in the figure, the power factor is $\frac{\alpha}{10}$. The value of α is _____.

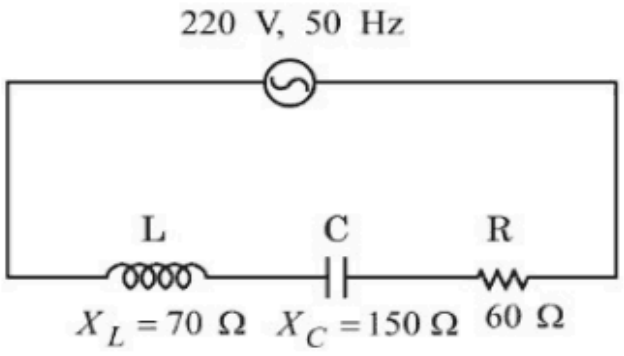

Options 1. 4
2. 8
3. 10
4. 6

(A) 4
(B) 8
(C) 10
(D) 6

Answer: (D) 6 · Official NTA final key

Q9 JEE Main 2026 · 23 Jan · Shift 1 Numerical

Using a variable frequency a.c. voltage source the maximum current measured in the given LCR circuit is 50 mA for $V = 5\sin(100t)$. The values of L and R are shown in the figure. The capacitance of the capacitor (C) used is _____ μF.

(see the figure above)

Q.47 Using a variable frequency a.c. voltage source the maximum current measured in the given LCR circuit is 50 mA for $V = 5\sin(100t)$ The values of L and R are shown in the figure. The capacitance of the capacitor (C) used is _____ μF.

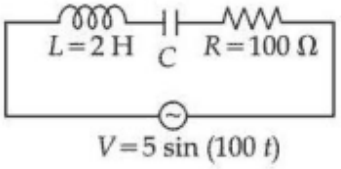

Numerical value type: the answer is a number.

Answer: 50. · Official NTA final key

Q10 JEE Main 2026 · 22 Jan · Shift 2 MCQ

An electric power line having total resistance of $2\,\Omega$, delivers 1 kW of power at 250 V. The percentage efficiency of transmission line is _____.

(A) 92.5
(B) 96.9
(C) 86.5
(D) 100

Answer: (B) 96.9 · Official NTA final key

Q11 JEE Main 2026 · 22 Jan · Shift 2 Numerical

A conducting circular loop is rotated about its diameter at a constant angular speed of 100 rad/s in a magnetic field of 0.5 T perpendicular to the axis of rotation. When the loop is rotated by 30° from the horizontal position, the induced EMF is 15.4 mV. The radius of the loop is _____ mm.

$\left(\text{Take } \pi = \dfrac{22}{7}\right)$

Numerical value type: the answer is a number.

Answer: 14. · Official NTA final key

Q12 JEE Main 2025 · 7 Apr · Shift 1 MCQ

An ac current is represented as $i = 5\sqrt{2} + 10\cos\left(650\pi t + \frac{\pi}{6}\right) Amp$. The r.m.s value of the current is

(A) 100 Amp
(B) 10 Amp
(C) $5\sqrt{2}$ Amp
(D) 50 Amp

Answer: (B) 10 Amp · Key from source paper

EdLoop JEE

Q13 JEE Main 2025 · 7 Apr · Shift 1 Numerical

For ac circuit shown in figure, $R = 100k\Omega$ and $C = 100pF$ and the phase difference between V_{in} and $(V_B - V_A)$ is 90°. The input signal frequency is 10^x rad / sec, where 'x' is _____ .

(see the figure above)

21. For ac circuit shown in figure, $\mathrm{R} = 100\mathrm{k}\Omega$ and $\mathrm{C} = 100\mathrm{pF}$ and the phase difference between $\mathrm{V_{in}}$ and $(\mathrm{V_B} - \mathrm{V_A})$ is 90°. The input signal frequency is 10^x rad / sec, where 'x' is ____.

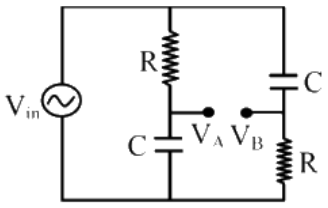

Numerical value type: the answer is a number.

Answer: 5. · Key from source paper

Q14 JEE Main 2025 · 7 Apr · Shift 2 Numerical

An inductor of reactance 100Ω, a capacitor of reactance 50Ω, and a resistor of resistance 50Ω are connected in series with an AC source of 10V, 50Hz. Average power dissipated by the circuit is _____

Numerical value type: the answer is a number.

Answer: 1. · Key from source paper

Q15 JEE Main 2025 · 4 Apr · Shift 1 MCQ

An alternating current is represented by the equation,

$i = 100\sqrt{2}\sin(100\pi t)$ ampere. The RMS value of current and the frequency of the given alternating current are

(A) $50\sqrt{2}A, 50Hz$

(B) $\frac{100}{\sqrt{2}}A, 100Hz$

(C) $100A, 50Hz$

(D) $100\sqrt{2}A, 100Hz$

Answer: (C) $100A, 50Hz$ · Key from source paper

Q16 JEE Main 2025 · 4 Apr · Shift 2 Numerical

An inductor of self inductance 1 H is connected in series with a resistor of 100πohm and an ac supply of 100π volt, 50 Hz. Maximum current flowing in the circuit is _____ A.

Numerical value type: the answer is a number.

Answer: 1. · Key from source paper

Q17 JEE Main 2025 · 3 Apr · Shift 2 MCQ

An electric bulb rated as $100W - 220V$ is connected to an ac source of rms voltage 220 V. The peak value of current through the bulb is :

(A) 0.45 A
(B) 0.64 A
(C) 2.2 A
(D) 0.32 A

Answer: (B) 0.64 A · Key from source paper

Q18 JEE Main 2025 · 29 Jan · Shift 1 MCQ

A coil of area A and N turns is rotating with angular velocity ω in a uniform magnetic field $\vec{B}$ about an axis perpendicular to $\vec{B}$. Magnetic flux φ and induced emf ε across it, at an instant when $\vec{B}$ is parallel to the plane of coil, are :

(A) $\varphi = \mathrm{AB}, \varepsilon = 0$
(B) $\varphi = 0, \varepsilon = 0$
(C) $\varphi = 0, \varepsilon = \mathrm{NAB}\omega$
(D) $\varphi = \mathrm{AB}, \varepsilon = \mathrm{NAB}\omega$

Answer: (C) $\varphi = 0, \varepsilon = \mathrm{NAB}\omega$ · Key from source paper

Q19 JEE Main 2025 · 29 Jan · Shift 1 MCQ

Given below are two statements : one is labelled as Assertion (A) and the other is labelled as Reason (R). Assertion (A) : Choke coil is simply a coil having a large inductance but a small resistance. Choke coils are used with fluorescent mercury-tube fittings. If household electric power is directly connected to a mercury tube, the tube will be damaged. Reason (R): By using the choke coil, the voltage across the tube is reduced by a factor $\left(R/\sqrt{R^2+\omega^2L^2}\right)$, where ω is frequency of the supply across resistor R and inductor L . If the choke coil were not used, the voltage across the resistor would be the same as the applied voltage. In the light of the above statements, choose the most appropriate answer from the options given below :

(A) (A) is true but (R) is false
(B) Both (A) and (R) are true and (R) is the correct explanation of (A)
(C) (A) is false but (R) is true
(D) Both (**A**) and (**R**) are true but (**R**) is not the correct explanation of (**A**)

Answer: (B) Both (A) and (R) are true and (R) is the correct explanation of (A) · Key from source paper

Q20 JEE Main 2025 · 24 Jan · Shift 1 MCQ

An alternating current is given by $\mathrm{I} = \mathrm{I_A}\sin\omega\mathrm{t} + \mathrm{I_B}\cos\omega\mathrm{t}$. The r.m.s current will be

(A) $\frac{|I_A+I_B|}{\sqrt{2}}$
(B) $\sqrt{\frac{I_A^2+I_B^2}{2}}$
(C) $\sqrt{I_A^2+I_B^2}$
(D) $\frac{\sqrt{I_A^2+I_B^2}}{2}$

Answer: (B) $\sqrt{\frac{I_A^2+I_B^2}{2}}$ · Key from source paper

---

Q21 JEE Main 2025 · 23 Jan · Shift 2 Numerical

In a series LCR circuit, a resistor of 300Ω, a capacitor of 25 nF and an inductor of 100 mH are used. For maximum current in the circuit, the angular frequency of the ac source is _____ $\times 10^4$ radians s^{-1}.

Numerical value type: the answer is a number.

Answer: 2. · Key from source paper

Q22 JEE Main 2025 · 22 Jan · Shift 2 MCQ

A series LCR circuit is connected to an alternating source of emf E. The current amplitude at resonant frequency is I_0. If the value of resistance R becomes twice of its initial value then amplitude of current at resonance will be

(A) $2I_0$
(B) I_0
(C) $\frac{I_0}{2}$
(D) $\frac{I_0}{\sqrt{2}}$

Answer: (C) $\frac{I_0}{2}$ · Key from source paper

Q23 JEE Main 2024 · 9 Apr · Shift 1 MCQ

A bulb and a capacitor are connected in series across an ac supply. A dielectric is then placed between the plates of the capacitor. The glow of the bulb:

(A) increases
(B) decreases
(C) remains same
(D) becomes zero

Answer: (A) increases · Key from source paper

Q24 JEE Main 2024 · 9 Apr · Shift 1 Numerical

When a coil is connected across a 20 V dc supply, it draws a current of 5 A. When it is connected across 20 V, 50 Hz ac supply, it draws a current of 4 A. The self inductance of the coil is _____ mH. (Take π = 3)

Numerical value type: the answer is a number.

Answer: 10. · Key from source paper

Q25 JEE Main 2024 · 9 Apr · Shift 2 Numerical

A capacitor of reactance $4\sqrt{3}\Omega$ and a resistor of resistance 4Ω are connected in series with an ac source of peak value $8\sqrt{2}$ V. The power dissipation in the circuit is _____ W.

Numerical value type: the answer is a number.

Answer: 4. · Key from source paper

Q26 JEE Main 2024 · 8 Apr · Shift 1 MCQ

A LCR circuit is at resonance for a capacitor C, inductance L and resistance R. Now the value of resistance is halved keeping all other parameters same. The current amplitude at resonance will be now:

(A) Zero
(B) same
(C) halved
(D) double

Answer: (D) double · Key from source paper

Q27 JEE Main 2024 · 8 Apr · Shift 2 MCQ

A coil of negligible resistance is connected in series with 90Ω resistor across 120 V, 60 Hz supply. A voltmeter reads 36 V across resistance. Inductance of the coil is :

(A) 0.286H
(B) 0.76H
(C) 2.86H
(D) 0.91H

Answer: (B) 0.76H · Key from source paper

Q28 JEE Main 2024 · 8 Apr · Shift 2 Numerical

An alternating emf $E = 110\sqrt{2}\sin 100t$ volt is applied to a capacitor of $2\mu F$, the rms value of current in the circuit is _____ mA,

Numerical value type: the answer is a number.

Answer: 22. · Key from source paper

Q29 JEE Main 2024 · 6 Apr · Shift 1 MCQ

Given below are two statements: Statement I: In an LCR series circuit, current is maximum at resonance. Statement II: Current in a purely resistive circuit can never be less than that in a series LCR

EdLoop JEE

circuit when connected to same voltage source. In the light of the above statements, choose the correct from the options given below:

(A) Statement I is false but Statement II is true
(B) Statement I is true but Statement II is false
(C) Both Statement I and Statement II are true
(D) Both Statement I and Statement II are false

Answer: (C) Both Statement I and Statement II are true · Key from source paper

---

Q30 JEE Main 2024 · 6 Apr · Shift 1 Numerical

When a dc voltage of 100 V is applied to an inductor, a dc current of 5 A flows through it. When an ac voltage of 200 V peak value is connected to inductor, its inductive reactance is found to be $20\sqrt{3}\Omega$. The power dissipated in the circuit is _____ W.

Numerical value type: the answer is a number.

Answer: 250. · Key from source paper

Q31 JEE Main 2024 · 6 Apr · Shift 2 Numerical

For a given series LCR circuit it is found that maximum current is drawn when value of variable capacitance is 2.5nF. If resistance of 200Ω and 100mH inductor is being used in the given circuit. The frequency of ac source is _____ $\times 10^3$ Hz. (given π^2 = 10)

Numerical value type: the answer is a number.

Answer: 10. · Key from source paper

Q32 JEE Main 2024 · 5 Apr · Shift 1 Numerical

An ac source is connected in given series LCR circuit. The rms potential difference across the capacitor of 20μF is _____ V.

(see the figure above)

Q28. An ac source is connected in given series LCR circuit. The rms potential difference across the capacitor of

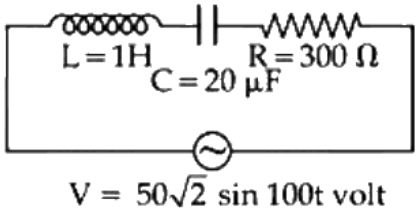

20μF is _____ V.

Numerical value type: the answer is a number.

Answer: 50. · Key from source paper

Q33 JEE Main 2024 · 5 Apr · Shift 2 MCQ

A series LCR circuit is subjected to an ac signal of 200 V, 50 Hz. If the voltage across the inductor (L = 10mH) is 31.4 V, then the current in this circuit is _____ .

(A) 68 A
(B) 63 A
(C) 10 A
(D) 10 mA

Answer: (C) 10 A · Key from source paper

Q34 JEE Main 2024 · 4 Apr · Shift 1 MCQ

In an ac circuit, the instantaneous current is zero, when the instantaneous voltage is maximum. In this case, the source may be connected to : A. pure inductor. B. pure capacitor. C. pure resistor. D. combination of an inductor and capacitor. Choose the correct answer from the options given below :

(A) A, B and C only
(B) A and B only
(C) B, C and D only
(D) A, B and D only

Answer: (D) A, B and D only · Key from source paper

Q35 JEE Main 2024 · 4 Apr · Shift 1 Numerical

A alternating current at any instant is given by $i = \left[6 + \sqrt{56}\sin(100\pi t + \pi/3)\right]$ A. The rms value of the current is _____ A.

Numerical value type: the answer is a number.

Answer: 8. · Key from source paper

Q36 JEE Main 2024 · 4 Apr · Shift 2 MCQ

Match List I with List II

LIST I	LIST II
A. Purely capacitive circuit	I. [drawing, see figure]
B. Purely inductive circuit	II. [drawing, see figure]
C. LCR series at resonance	III. [drawing, see figure]
D. LCR series circuit	IV. [drawing, see figure]

(see the figure above)

Choose the correct answer from the options given below:

Q14.

	LIST I		LIST II
A.	Purely capacitive circuit	I.	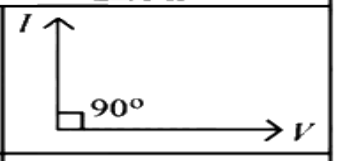
B.	Purely inductive circuit	II.	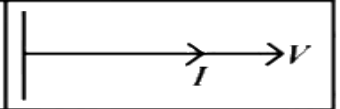
C.	LCR series at resonance	III.	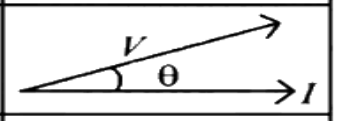
D.	LCR series circuit	IV.	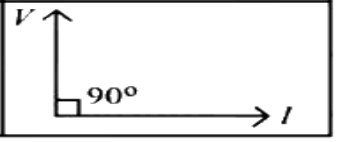

Match List I with List II

Choose the correct answer from the options given below:

(1) A-I. B-IV, C-II, D-III

(2) A-IV. B-I. C-II. D-III

(3) A-IV. B-I, C-III, D-II

(4) A-I. B-IV, C-III, D-II

(A) A-I. B-IV, C-II, D-III

(B) A-IV. B-I. C-II. D-III

(C) A-IV. B-I, C-III, D-II

(D) A-I. B-IV, C-III, D-II

Answer: (A) A-I. B-IV, C-II, D-III · Key from source paper

Q37 JEE Main 2024 · 1 Feb · Shift 1 MCQ

In series LCR circuit, the capacitance is changed from C to $4C$. To keep the resonance frequency unchanged, the new inductance should be :

(A) reduced by $\frac{1}{4}L$

(B) increased by $2L$

(C) reduced by $\frac{3}{4}L$

(D) increased to $4L$

Answer: (C) reduced by $\frac{3}{4}L$ · Key from source paper

---

Q38 JEE Main 2024 · 1 Feb · Shift 2 MCQ

A transformer has an efficiency of 80% and works at 10 V and 4 kW. If the secondary voltage is 240 V, then the current in the secondary coil is:

(A) 1.59 A
(B) 13.33 A
(C) 1.33 A
(D) 15.1 A

Answer: (B) 13.33 A · Key from source paper

Q39 JEE Main 2024 · 1 Feb · Shift 2 Numerical

A coil of 200 turns and area 0.20 m^2 is rotated at half a revolution per second and is placed in uniform magnetic field of 0.01 T perpendicular to axis of rotation of the coil. The maximum voltage generated in the coil is $\frac{2\pi}{\beta}$ volt. The value of β is _____.

Numerical value type: the answer is a number.

Answer: 5. · Key from source paper

Q40 JEE Main 2024 · 31 Jan · Shift 2 MCQ

An AC voltage $V = 20\sin 200\pi t$ is applied to a series LCR circuit which drives a current $I = 10\sin 200\pi t + \frac{\pi}{3}$. The average power dissipated is:

(A) 21.6 W
(B) 200 W
(C) 173.2 W
(D) 50 W

Answer: (D) 50 W · Key from source paper

Q41 JEE Main 2024 · 30 Jan · Shift 1 MCQ

A series LR circuit connected with an ac source $E = (25\ \sin 1000t)$ V has a power factor of $\frac{1}{\sqrt{2}}$. If the source of emf is changed to $E = (20\ \sin 2000t)$ V, the new power factor of the circuit will be :

(A) $\frac{1}{\sqrt{2}}$
(B) $\frac{1}{\sqrt{3}}$
(C) $\frac{1}{\sqrt{5}}$
(D) $\frac{1}{\sqrt{7}}$

Answer: (C) $\frac{1}{\sqrt{5}}$ · Key from source paper

Q42 JEE Main 2024 · 30 Jan · Shift 1 MCQ

Primary coil of a transformer is connected to 220 V AC. Primary and secondary turns of the transforms are 100 and 10 respectively. Secondary coil of transformer is connected to two series resistances as shown in figure. The output voltage (V_0) is :

(see the figure above)

Q15. Primary coil of a transformer is connected to 220 V AC. Primary and secondary turns of the transforms are 100 and 10 respectively. Secondary coil of transformer is connected to two series resistances as shown in figure. The output voltage (V_0) is :

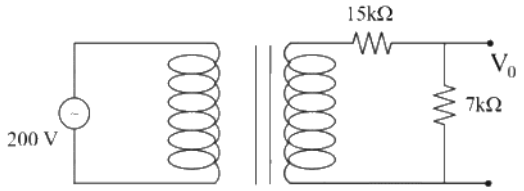

(1) 7 V
(2) 15 V
(3) 44 V
(4) 22 V

(A) 7 V
(B) 15 V
(C) 44 V
(D) 22 V

Answer: (A) 7 V · Key from source paper

Q43 JEE Main 2024 · 30 Jan · Shift 2 MCQ

An alternating voltage $V(t) = 220 \sin 100\pi t$ volt is applied to a purely resistive load of 50 Ω. The time taken for the current to rise from half of the peak value to the peak value is:

(A) 5 ms
(B) 3.3 ms
(C) 7.2 ms
(D) 2.2 ms

Answer: (B) 3.3 ms · Key from source paper

Q44 JEE Main 2024 · 30 Jan · Shift 2 Numerical

A power transmission line feeds input power at 2.3 kV to a step down transformer with its primary winding having 3000 turns. The output power is delivered at 230 V by the transformer. The current in the primary of the transformer is 5 A and its efficiency is 90%. The winding of transformer is made of copper. The output current of transformer is _____ A.

Numerical value type: the answer is a number.

Answer: 45. · Key from source paper

Q45 JEE Main 2024 · 29 Jan · Shift 2 MCQ

In an a.c. circuit, voltage and current are given by: $V = 100 \sin(100t)$ V and $I = 100 \sin\left(100t + \frac{\pi}{3}\right)$ mA respectively. The average power dissipated in one cycle is :

(A) 5 W
(B) 10 W
(C) 2.5 W
(D) 25 W

Answer: (C) 2.5 W · Key from source paper

Q46 JEE Main 2024 · 27 Jan · Shift 2 MCQ

The primary side of a transformer is connected to 230 V, 50 Hz supply. The turn ratio of primary to secondary winding is 10 : 1. Load resistance connected to the secondary side is 46 Ω. The power consumed in it is:

(A) 12.5 W
(B) 10.0 W
(C) 11.5 W
(D) 12.0 W

Answer: (C) 11.5 W · Key from source paper

Q47 JEE Main 2024 · 27 Jan · Shift 2 Numerical

A series LCR circuit with $L = \frac{100}{\pi}$ mH, $C = \frac{10^{-3}}{\pi}$ F and $R = 10\ \Omega$, is connected across an AC source of 220 V, 50 Hz supply. The power factor of the circuit would be _____.

Numerical value type: the answer is a number.

Answer: 1. · Key from source paper

Q48 JEE Main 2023 · 13 Apr · Shift 2 MCQ

Given below are two statements:
Statement I : An AC circuit undergoes electrical resonance if it contains either a capacitor or an inductor.
Statement II: An AC circuit containing a pure capacitor or a pure inductor consumes high power due to its non-zero power factor. In the light of above statements, choose the correct answer from the options given below:

(A) Statement I is false but statement II is true
(B) Statement I is true but statement II is false
(C) Both Statement I and Statement II are false
(D) Both Statement I and Statement II are true

Answer: (C) Both Statement I and Statement II are false · Key from source paper

Q49 JEE Main 2023 · 12 Apr · Shift 1 MCQ

Given below are two statements:

Statement I : When the frequency of an AC source in a series LCR circuit increases, the current in the circuit first increases, attains a maximum value and then decreases.

Statement II : In a series LCR circuit, the value of power factor at resonance is one.

In the light of given statements, choose the most appropriate answer from the options given below.

(A) Statement I is incorrect but Statement II is true

(B) Both Statement I and Statement II are false

(C) Both Statement I and Statement II are true

(D) Statement I is correct but Statement II is false

Answer: (C) Both Statement I and Statement II are true · Key from source paper

Q50 JEE Main 2023 · 11 Apr · Shift 1 MCQ

see figure

Q15.

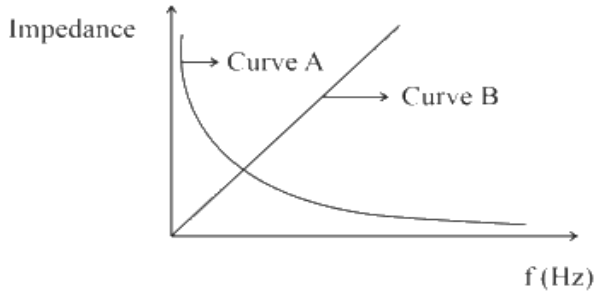

As per the given graph, choose the correct representation for curve A and curve B

{Where $X_C =$ Reactance of pure capacitive circuit connected with A.C. source

$X_L =$ Reactance of pure inductive circuit connected with A.C. source

$R =$ Impedance of pure resistive circuit connected with A.C. source

$Z =$ Impedance of the LCR series circuit }

(1) $A = X_C, B = R$ (2) $A = X_L, B = R$

(3) $A = X_L, B = Z$ (4) $A = X_C, B = X_L$

(A) $A = X_C, B = R$

(B) $A = X_L, B = R$

(C) $A = X_L, B = Z$

(D) $A = X_C, B = X_L$

Answer: (D) $A = X_C, B = X_L$ · Key from source paper

Q51 JEE Main 2023 · 10 Apr · Shift 1 MCQ

Given below are two statements:

Statement I: Maximum power is dissipated in a circuit containing an inductor, a capacitor and a

resistor connected in series with an AC source, when resonance occurs.
Statement II: Maximum power is dissipated in a circuit containing pure resistor due to zero phase difference between current and voltage.
In the light of the above statements, choose the correct answer from the options given below:

(A) Statement I is false but Statement II is true
(B) Both Statement I and Statement II are true
(C) Statement I is true but Statement II is false
(D) Both Statement I and Statement II are false

Answer: (B) Both Statement I and Statement II are true · Key from source paper

Q52 JEE Main 2023 · 8 Apr · Shift 2 Numerical

A series combination of resistor of resistance $100\ \Omega$ inductor of inductance $1\ \mathrm{H}$ and capacitor of capacitance $6.25\ \mu\mathrm{F}$ is connected to an ac source. The quality factor of the circuit will be _____ .

Numerical value type: the answer is a number.

Answer: 4. · Key from source paper

Q53 JEE Main 2023 · 6 Apr · Shift 1 Numerical

An ideal transformer with purely resistive load operates at $12\ \mathrm{kV}$ on the primary side. It supplies electrical energy to a number of nearby houses at $120\ \mathrm{V}$. The average rate of energy consumption in the houses served by the transformer is $60\ \mathrm{kW}$. The value of resistive load (R_s) required in the secondary circuit will be _____ $\mathrm{m}\Omega$.

Numerical value type: the answer is a number.

Answer: 240. · Key from source paper

Q54 JEE Main 2023 · 6 Apr · Shift 2 MCQ

A capacitor of capacitance $150.0\ \mu\mathrm{F}$ is connected to an alternating source of emf given by $E = 36\sin(120\pi t)\ \mathrm{V}$. The maximum value of current in the circuit is approximately equal to:

(A) $2\ \mathrm{A}$
(B) $\sqrt{2}\ \mathrm{A}$
(C) $2\sqrt{2}\ \mathrm{A}$
(D) $\frac{1}{\sqrt{2}}\ \mathrm{A}$

Answer: (A) $2\ \mathrm{A}$ · Key from source paper

Q55 JEE Main 2023 · 1 Feb · Shift 1 MCQ

Match the List-I with List-II.

List I	List II
A AC generator	I Presence of both L and C

B	Transformer	II	Electromagnetic Induction
C	Resonance phenomenon to occur	III	Quality factor
D	Sharpness of resonance	IV	Mutual Inductance

Choose the correct answer from the options given below:

(A) A-IV, B-II, C-I, D-III
(B) A-II, B-I, C-III, D-IV
(C) A-II, B-IV, C-I, D-III
(D) A-IV, B-III, C-I, D-II

Answer: (C) A-II, B-IV, C-I, D-III · Key from source paper

Q56 JEE Main 2023 · 1 Feb · Shift 1 Numerical

A series LCR circuit is connected to an ac source of 220 V, 50 Hz. The circuit contain a resistance R = 100 Ω and an inductor of inductive reactance X_L = 79.6 Ω. The capacitance of the capacitor needed to maximize the average rate at which energy is supplied will be _____ μF.

Numerical value type: the answer is a number.

Answer: 40. · Key from source paper

Q57 JEE Main 2023 · 1 Feb · Shift 2 Numerical

A square shaped coil of area 70 cm^2 having 600 turns rotates in a magnetic field of 0.4 $\mathrm{Wb\ m}^{-2}$, about an axis which is parallel to one of the side of the coil and perpendicular to the direction of field. If the coil completes 500 revolution in a minute, the instantaneous emf when the plane of the coil is inclined at 60° with the field, will be _____ V. (Take $\pi = \frac{22}{7}$)

Numerical value type: the answer is a number.

Answer: 44. · Key from source paper

Q58 JEE Main 2023 · 31 Jan · Shift 1 Numerical

An inductor of 0.5 mH, a capacitor of 20 $\mu\mathrm{F}$ and resistance of 20 Ω are connected in series with a 220 V ac source. If the current is in phase with the emf, the amplitude of current of the circuit is $\sqrt{x}$ A. The value of x is-

Numerical value type: the answer is a number.

Answer: 242. · Key from source paper

Q59 JEE Main 2023 · 31 Jan · Shift 2 MCQ

An alternating voltage source V = 260 sin(628t) is connected across a pure inductor of 5 mH. Inductive reactance in the circuit is:

(A) 3.14Ω
(B) 6.28Ω
(C) 0.5Ω
(D) 0.318Ω

Answer: (A) 3.14Ω · Key from source paper

Q60 JEE Main 2023 · 31 Jan · Shift 2 Numerical

A series LCR circuit consists of R = 80 Ω. X_L = 100 Ω, and X_C = 40 Ω. The input voltage is 2500 cos(100πt) V. The amplitude of current, in the circuit, is _____ A.

Numerical value type: the answer is a number.

Answer: 25. · Key from source paper

Q61 JEE Main 2023 · 30 Jan · Shift 1 MCQ

In a series LR circuit with $X_L = R$, power factor is P_1. If a capacitor of capacitance C with $X_C = X_L$ is added to the circuit the power factor becomes P_2. The ratio of P_1 to P_2 will be :

(A) 1: 3
(B) 1: $\sqrt{2}$
(C) 1: 1
(D) 1: 2

Answer: (B) 1: $\sqrt{2}$ · Key from source paper

Q62 JEE Main 2023 · 30 Jan · Shift 2 Numerical

In an ac generator, a rectangular coil of 100 turns each having area 14×10^{-2} m^2 is rotated at 360 rev min^{-1} about an axis perpendicular to a uniform magnetic field of magnitude 3.0 T. The maximum value of the emf produced will be _____ V.
[Take $\pi = \frac{22}{7}$]

Numerical value type: the answer is a number.

Answer: 1584. · Key from source paper

Q63 JEE Main 2023 · 30 Jan · Shift 2 MCQ

In the given circuit, rms value of current (I_{rms}) through the resistor R is :

(see the figure above)

Q22. In the given circuit, rms value of current (I_{rms}) through the resistor R is :

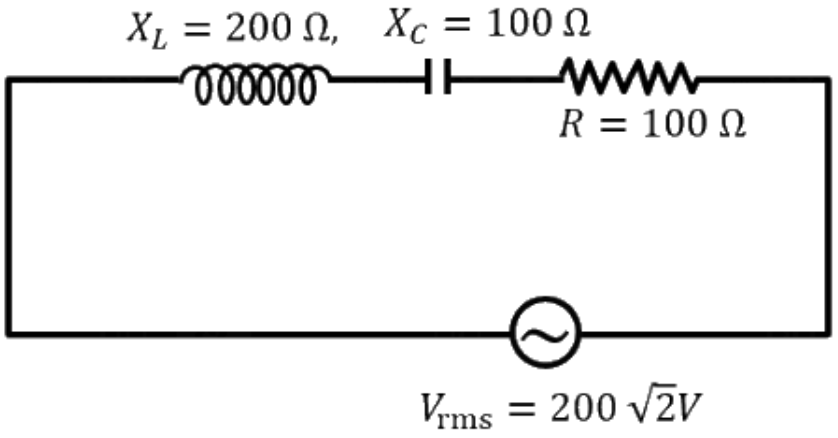

(1) 2 A
(2) $\frac{1}{2}$ A
(3) 20 A
(4) $2\sqrt{2}$ A

(A) 2 A
(B) $\frac{1}{2}$ A
(C) 20 A
(D) $2\sqrt{2}$ A

Answer: (A) 2 A · Key from source paper

Q64 JEE Main 2023 · 29 Jan · Shift 2 MCQ

For the given figures, choose the correct options:
(see the figure above)

Q21. For the given figures, choose the correct options:

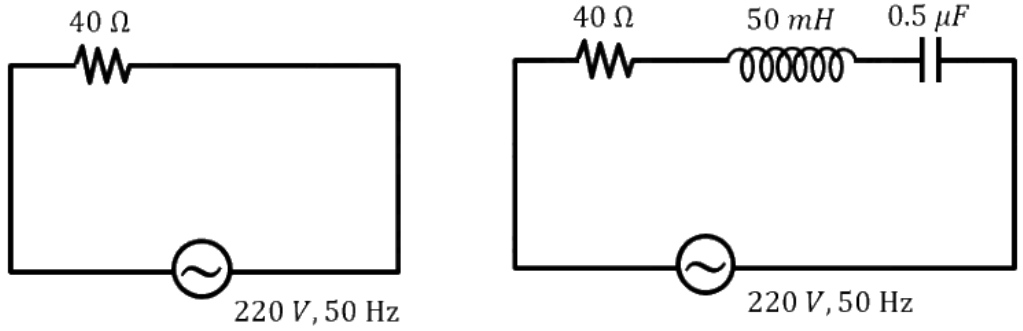

(1) The rms current in circuit (b) can never be larger than that in (a)
(2) The rms current in figure (a) is always equal to that in figure (b)
(3) The rms current in circuit (b) can be larger than that in (a)
(4) At resonance, current in (b) is less than that in (a)

(A) The rms current in circuit (b) can never be larger than that in (a)

(B) The rms current in figure (a) is always equal to that in figure (b)

(C) The rms current in circuit (b) can be larger than that in (a)

(D) At resonance, current in (b) is less than that in (a)

Answer: (A) The rms current in circuit (b) can never be larger than that in (a) · Key from source paper

---

Q65 JEE Main 2023 · 29 Jan · Shift 2 Numerical

An inductor of inductance $2\ \mu\text{H}$ is connected in series with a resistance, a variable capacitor and an AC source of frequency 7 kHz. The value of capacitance for which maximum current is drawn into the circuit is $\frac{1}{x}$ F , where the value of x is _____.
(Take $\pi = \frac{22}{7}$)

Numerical value type: the answer is a number.

Answer: 3872. · Key from source paper

Q66 JEE Main 2023 · 25 Jan · Shift 1 Numerical

An LCR series circuit of capacitance $62.5\ \text{nF}$ and resistance of $50\ \Omega$, is connected to an A.C. source of frequency $2.0\ \text{kHz}$. For maximum value of amplitude of current in circuit, the value of inductance is _____ mH.
(Take $\pi^2 = 10$)

Numerical value type: the answer is a number.

Answer: 100. · Key from source paper

Q67 JEE Main 2023 · 25 Jan · Shift 2 Numerical

A series LCR circuit is connected to an AC source of 220 V, 50 Hz. The circuit contains a resistance $R = 80\ \Omega$, an inductor of inductive reactance $X_L = 70\ \Omega$, and a capacitor of capacitive reactance $X_C = 130\ \Omega$. The power factor of circuit is $\frac{x}{10}$. The value of x is:

Numerical value type: the answer is a number.

Answer: 8. · Key from source paper

Q68 JEE Main 2023 · 24 Jan · Shift 1 Numerical

In the circuit shown in the figure, the ratio of the quality factor and the band width is _____ s.

(see the figure above)

Q28. In the circuit shown in the figure, the ratio of the quality factor and the band width is _____ s.

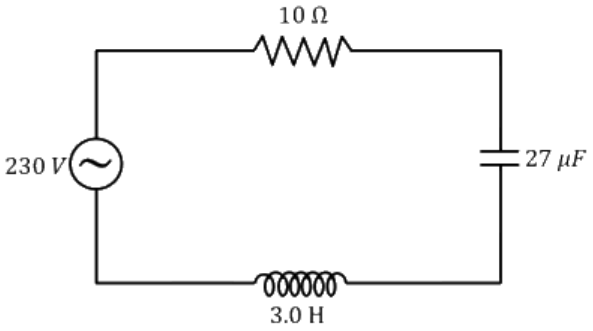

Numerical value type: the answer is a number.

Answer: 10. · Key from source paper

Q69 JEE Main 2022 · 29 Jul · Shift 1 MCQ

An alternating emf $E = 440 \sin 100\pi t$ is applied to a circuit containing an inductance of $\frac{\sqrt{2}}{\pi}$ H. If an a.c. ammeter is connected in the circuit, its reading will be :

(A) 4.4 A
(B) 1.55 A
(C) 2.2 A
(D) 3.11 A

Answer: (C) 2.2 A · Key from source paper

Q70 JEE Main 2022 · 29 Jul · Shift 2 MCQ

A circuit element X when connected to an AC supply of peak voltage 100 V gives a peak current of 5 A which is in phase with the voltage. A second element Y when connected to the same AC supply also gives the same value of peak current which lags behind the voltage by $\frac{\pi}{2}$. If X and Y are connected in series to the same supply, what will be the rms value of the current in ampere?

(A) $\frac{10}{\sqrt{2}}$
(B) $\frac{5}{\sqrt{2}}$
(C) $5\sqrt{2}$
(D) $\frac{5}{2}$

Answer: (D) $\frac{5}{2}$ · Key from source paper

Q71 JEE Main 2022 · 28 Jul · Shift 1 MCQ

The equation of current in a purely inductive circuit is $5 \sin 49\pi t - 30^\circ$. If the inductance is 30mH then the equation for the voltage across the inductor, will be

(A) $1.47 \sin 49\pi t - 30^\circ$
(B) $1.47 \sin 49\pi t + 60^\circ$
(C) $23.1 \sin 49\pi t - 30^\circ$
(D) $23.1 \sin 49\pi t + 60^\circ$

Answer: (D) $23.1 \sin 49\pi t + 60^\circ$ · Key from source paper

Q72 JEE Main 2022 · 28 Jul · Shift 1 Numerical

The frequencies at which the current amplitude in an LCR series circuit becomes $\frac{1}{\sqrt{2}}$ times its maximum value, are $212\ \text{rad s}^{-1}$ and $232\ \text{rad s}^{-1}$. The value of resistance in the circuit is $R = 5\ \Omega$. The self inductance in the circuit is _____ mH.

Numerical value type: the answer is a number.

Answer: 250. · Key from source paper

Q73 JEE Main 2022 · 28 Jul · Shift 2 MCQ

A transformer operating at primary voltage $8\ \text{kV}$ and secondary voltage $160\ \text{V}$ serves a load of $80\ \text{kW}$. Assuming the transformer to be ideal with purely resistive load and working on unity power factor, the loads in the primary and secondary circuit would be

(A) $800\ \Omega$ and $1.06\ \Omega$
(B) $10\ \Omega$ and $500\ \Omega$
(C) $800\ \Omega$ and $0.32\ \Omega$
(D) $1.06\ \Omega$ and $500\ \Omega$

Answer: (C) $800\ \Omega$ and $0.32\ \Omega$ · Key from source paper

Q74 JEE Main 2022 · 27 Jul · Shift 1 MCQ

A direct current of 4 A and an alternating current of peak value 4 A flow through resistance of 3 Ω and 2 Ω respectively. The ratio of heat produced in the two resistances in same interval of time will be :

(A) 3 : 2
(B) 3 : 1
(C) 3 : 4
(D) 4 : 3

Answer: (B) 3 : 1 · Key from source paper

Q75 JEE Main 2022 · 27 Jul · Shift 1 Numerical

To light, a 50 W, 100 V lamp is connected, in series with a capacitor of capacitance $\frac{50}{\pi\sqrt{x}}\ \mu$F, with 200 V, 50 Hz AC source. The value of x will be _____ .

Numerical value type: the answer is a number.

Answer: 3. · Key from source paper

Q76 JEE Main 2022 · 27 Jul · Shift 2 MCQ

A series LCR circuit has $L = 0.01$ H, $R = 10\ \Omega$ and $C = 1\ \mu$F and it is connected to ac voltage of amplitude (V_m) 50 V. At frequency 60% lower than resonant frequency, the amplitude of current will be approximately

(A) 466 mA
(B) 312 mA
(C) 238 mA
(D) 196 mA

Answer: (C) 238 mA · Key from source paper

Q77 JEE Main 2022 · 26 Jul · Shift 1 MCQ

In a series LR circuit $X_L = R$ and power factor of the circuit is P_1. When capacitor with capacitance C such that $X_L = X_C$ is put in series, the power factor becomes P_2. The ratio $\frac{P_1}{P_2}$ is

(A) $\frac{1}{2}$
(B) $\frac{1}{\sqrt{2}}$
(C) $\frac{\sqrt{3}}{\sqrt{2}}$
(D) $2:1$

Answer: (B) $\frac{1}{\sqrt{2}}$ · Key from source paper

Q78 JEE Main 2022 · 26 Jul · Shift 1 Numerical

The effective current I in the given circuit at very high frequencies will be _____ A.

(see the figure above)

Q27. The effective current I in the given circuit at very high frequencies will be _____ A.

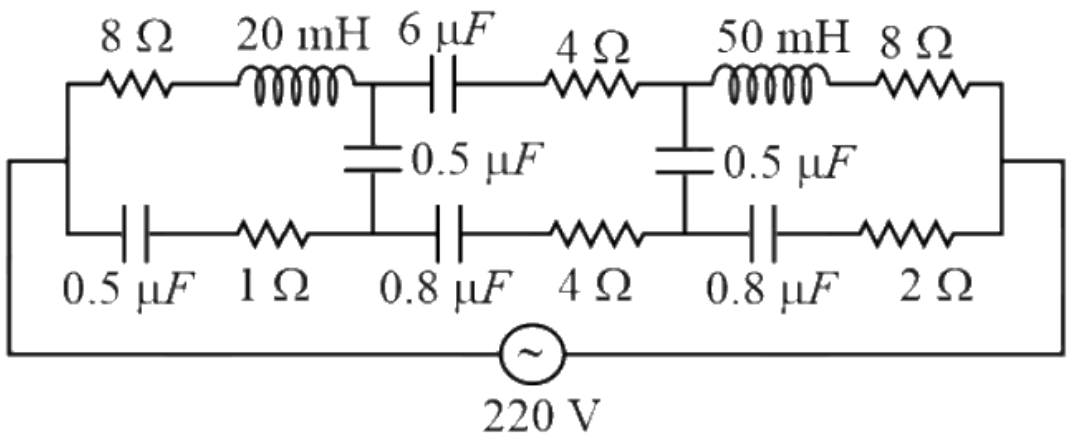

Numerical value type: the answer is a number.

Answer: 44. · Key from source paper

Q79 JEE Main 2022 · 25 Jul · Shift 1 MCQ

To increase the resonant frequency in series LCR circuit,

(A) Source frequency should be increased
(B) Another resistance should be added in series with the first resistance.
(C) Another capacitor should be added in series with the first capacitor
(D) The source frequency should be decreased

Answer: (C) Another capacitor should be added in series with the first capacitor · Key from source paper

Q80 JEE Main 2022 · 25 Jul · Shift 1 MCQ

The RMS value of conduction current in a parallel plate capacitor is $6.9\ \mu$A. The capacity of this capacitor, if it is connected to 230 V AC supply with an angular frequency of 600 $\mathrm{rad\ s^{-1}}$, will be

(A) $5\mathrm{pF}$
(B) $50\mathrm{pF}$
(C) $100\mathrm{pF}$
(D) $200\mathrm{pF}$

Answer: (B) $50\mathrm{pF}$ · Key from source paper

Q81 JEE Main 2022 · 25 Jul · Shift 2 MCQ

When you walk through a metal detector carrying a metal object in your pocket, it raises an alarm. This phenomenon works on

(A) Electromagnetic induction
(B) Resonance in ac circuits
(C) Mutual induction in ac circuits
(D) interference of electromagnetic waves

Answer: (B) Resonance in ac circuits · Key from source paper

Q82 JEE Main 2022 · 29 Jun · Shift 1 MCQ

For a series LCR circuit, I vs ω curve is shown

(see the figure above)

(a) To the left of ω_r, the circuit is mainly capacitive.
(b) To the left of ω_r, the circuit is mainly inductive.
(c) At ω_r, impedance of the circuit is equal to the resistance of the circuit.
(d) At ω_r, impedance of the circuit is 0.
Choose the most appropriate answer from the options given below.

EdLoop JEE

Q16. For a series LCR circuit, I vs ω curve is shown

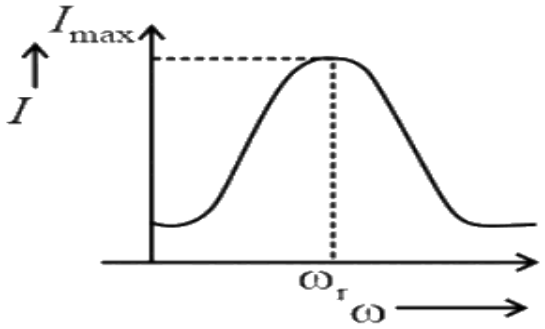

(a) To the left of ω_r, the circuit is mainly capacitive.
(b) To the left of ω_r, the circuit is mainly inductive.
(c) At ω_r, impedance of the circuit is equal to the resistance of the circuit.
(d) At ω_r, impedance of the circuit is 0.
Choose the most appropriate answer from the options given below.
(1) (a) and (d) only
(2) (b) and (d) only
(3) (a) and (c) only
(4) (b) and (c) only

(A) (a) and (d) only
(B) (b) and (d) only
(C) (a) and (c) only
(D) (b) and (c) only

Answer: (C) (a) and (c) only · Key from source paper

Q83 JEE Main 2022 · 29 Jun · Shift 2 Numerical

An inductor of $0.5\ \mathrm{mH}$, a capacitor of $200\ \mu\mathrm{F}$ and a resistor of $2\ \Omega$ are connected in series with a $220\ \mathrm{V}$ ac source. If the current is in phase with the emf, the frequency of ac source will be _____ $\times 10^2\ \mathrm{Hz}$.

Numerical value type: the answer is a number.

Answer: 5. · Key from source paper

Q84 JEE Main 2022 · 28 Jun · Shift 1 Numerical

An AC source is connected to an inductance of $100\ \mathrm{mH}$, a capacitance of $100\ \mu\mathrm{F}$ and a resistance of $120\ \Omega$ as shown in figure. The time in which the resistance having a thermal capacity $2\ \mathrm{J}\,^{\circ}\mathrm{C}^{-1}$ will get heated by $16^{\circ}\mathrm{C}$ is _____ s.

(see the figure above)

Q29. An AC source is connected to an inductance of 100 mH, a capacitance of 100 μF and a resistance of 120 Ω as shown in figure. The time in which the resistance having a thermal capacity 2 J $^{\circ}C^{-1}$ will get heated by 16 $^{\circ}$C is _____ s.

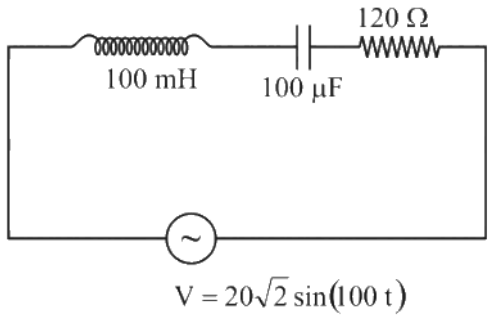

Numerical value type: the answer is a number.

Answer: 15. · Key from source paper

Q85 JEE Main 2022 · 28 Jun · Shift 1 Numerical

A telegraph line of length 100 km has a capacity of 0.01 μF km^{-1} and it carries an alternating current at 0.5 kilo cycle per second. If minimum impedance is required, then the value of the inductance that needs to be introduced in series is _____ mH. (If $\pi = \sqrt{10}$)

Numerical value type: the answer is a number.

Answer: 100. · Key from source paper

Q86 JEE Main 2022 · 28 Jun · Shift 2 Numerical

In the given circuit, the magnitude of V_L and V_C are twice that of V_R. Given that $f = 50$ Hz, the inductance of the coil is $\frac{1}{K\pi}$ mH. The value of K is _____ .

(see the figure above)

Q27. In the given circuit, the magnitude of V_L and V_C are twice that of V_R. Given that $f = 50$ Hz, the inductance of the coil is $\frac{1}{K\pi}$ mH. The value of K is _____ .

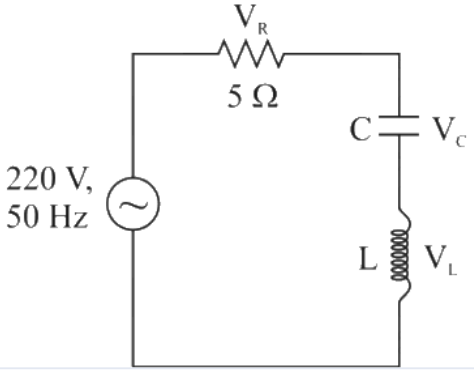

Numerical value type: the answer is a number.

Accepted answers: 0 or 0.01. · Key from source paper

Q87 JEE Main 2022 · 27 Jun · Shift 1 MCQ

The current flowing through an ac circuit is given by $I = 5\sin(120\pi t)$ A. How long will the current take to reach the peak value starting from zero?

(A) $\frac{1}{60}$ s
(B) 60 s
(C) $\frac{1}{120}$ s
(D) $\frac{1}{240}$ s

Answer: (D) $\frac{1}{240}$ s · Key from source paper

Q88 JEE Main 2022 · 27 Jun · Shift 1 Numerical

A 220 V, 50 Hz AC source is connected to a 25 V, 5 W lamp and an additional resistance R in series (as shown in figure) to run the lamp at its peak brightness, then the value of R (in ohm) will be
(see the figure above)

Q25. A 220 V, 50 Hz AC source is connected to a 25 V, 5 W lamp and an additional resistance R in series (as shown in figure) to run the lamp at its peak brightness, then the value of R (in ohm) will be

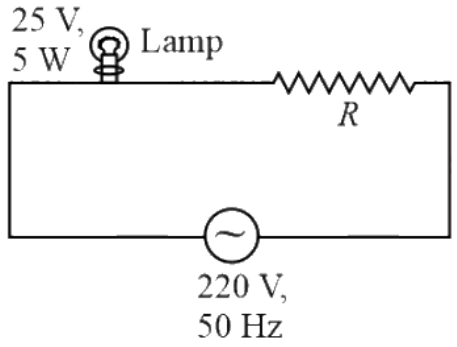

Numerical value type: the answer is a number.

Answer: 975. · Key from source paper

Q89 JEE Main 2022 · 26 Jun · Shift 1 Numerical

A 110 V, 50 Hz, AC source is connected in the circuit (as shown in figure). The current through the resistance 55Ω, at resonance in the circuit, will be _____ A.
(see the figure above)

Q27. A 110 V, 50 Hz, AC source is connected in the circuit (as shown in figure). The current through the resistance $55\ \Omega$, at resonance in the circuit, will be _____A.

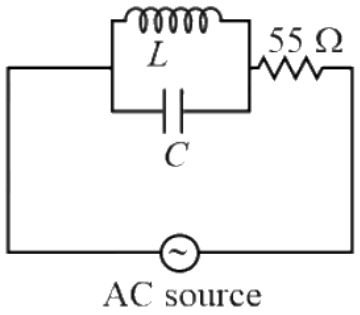

Numerical value type: the answer is a number.

Answer: 0. · Key from source paper

Q90 JEE Main 2022 · 25 Jun · Shift 1 MCQ

Match List - I with List - II.

List-I

(A) AC generator

(B) Galvanometer

(C) Transformer

(D) Metal detector

List-II

(I) Detects the presence of current in the circuit

(II) Converts mechanical energy into electrical energy

(III) Works on the principle of resonance in AC circuit

(IV) Changes an alternating voltage for smaller or greater value

(A) A - II, B - I, C - IV, D - III

(B) A - II, B - I, C - III, D - IV

(C) A - III, B - IV, C - II, D - I

(D) A - III, B - I, C - II, D - IV

Answer: (A) A - II, B - I, C - IV, D - III · Key from source paper

Q91 JEE Main 2022 · 25 Jun · Shift 1 MCQ

If wattless current flows in the AC circuit, then the circuit is :

(A) Purely Resistive circuit

(B) Purely Inductive circuit

(C) LCR series circuit

(D) RC series circuit only

Answer: (B) Purely Inductive circuit · Key from source paper

Q92 JEE Main 2022 · 25 Jun · Shift 2 MCQ

A sinusoidal voltage $Vt = 210 \sin 3000t$ volt is applied to a series LCR circuit in which $L = 10\ \mathrm{mH}$, $C = 25\ \mu\mathrm{F}$ and $R = 100\Omega$. The phase difference Φ between the applied voltage and resultant current will be

(A) $\tan^{-1} 0.17$

(B) $\tan^{-1} 9.46$

(C) $\tan^{-1} 0.30$

(D) $\tan^{-1} 13.33$

Answer: (A) $\tan^{-1} 0.17$ · Key from source paper

Q93 JEE Main 2022 · 25 Jun · Shift 2 Numerical

In a series LCR circuit, the inductance, capacitance and resistance are $L = 100$ mH, $C = 100$ μFand $R = 10\ \Omega$ respectively. They are connected to an AC source of voltage 220 V and frequency of 50 Hz. The approximate value of current in the circuit will be _____ A.

(see the figure above)

Q29. In a series LCR circuit, the inductance, capacitance and resistance are $L = 100$ mH, $C = 100$ μFand $R = 10\ \Omega$ respectively. They are connected to an AC source of voltage 220 V and frequency of 50 Hz. The approximate value of current in the circuit will be _____ A.

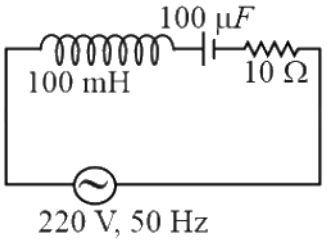

Numerical value type: the answer is a number.

Answer: 22. · Key from source paper

Q94 JEE Main 2022 · 24 Jun · Shift 1 MCQ

A resistance of $40\ \Omega$ is connected to a source of alternating current rated 220 V, 50 Hz. Find the time taken by the current to change from its maximum value to the rms value :

(A) 2.5 ms

(B) 1.25 ms

(C) 2.5 s

(D) 0.25 s

Answer: (A) 2.5 ms · Key from source paper

Q95 JEE Main 2022 · 24 Jun · Shift 1 Numerical

As shown in the figure an inductor of inductance 200 mH is connected to an AC source of emf 220 V and frequency 50 Hz. The instantaneous voltage of the source is 0 V when the peak value of current is $\frac{\sqrt{a}}{\pi}$ A. The value of a is _____ .

(see the figure above)

Q26. As shown in the figure an inductor of inductance 200 mH is connected to an AC source of emf 220 Vand frequency 50 Hz. The instantaneous voltage of the source is 0 V when the peak value of current is $\frac{\sqrt{a}}{\pi}$ A. The value of a is _____ .

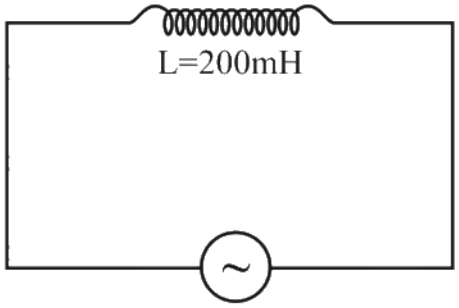

Numerical value type: the answer is a number.

Answer: 242. · Key from source paper

Q96 JEE Main 2022 · 24 Jun · Shift 2 MCQ

Given below are two statements :

Statement-I: The reactance of an ac circuit is zero. It is possible that the circuit contains a capacitor and an inductor.

Statement-II: In ac circuit, the average power delivered by the source never becomes zero.

In the light of the above statements, choose the correct answer from the options given below

(A) Both Statement I and Statement II are true.

(B) Both Statement I and Statement II are false.

(C) Statement I is true but Statement II is false.

(D) Statement I is false but Statement II is true.

Answer: (C) Statement I is true but Statement II is false. · Key from source paper

---

Q97 JEE Main 2022 · 24 Jun · Shift 2 Numerical

A circular coil of 1000 turns each with area $1\ \mathrm{m}^2$ is rotated about its vertical diameter at the rate of one revolution per second in a uniform horizontal magnetic field of $0.07\ \mathrm{T}$. The maximum voltage generation will be _____ V.

Numerical value type: the answer is a number.

Answer: 440. · Key from source paper

Q98 JEE Main 2021 · 31 Aug · Shift 1 MCQ

In an ac circuit, an inductor, a capacitor and a resistor are connected in series with $X_L = R = X_C$. Impedance of this circuit is :

(A) Zero
(B) R
(C) $R\sqrt{2}$
(D) $2R^2$

Answer: (B) R · Key from source paper

Q99 JEE Main 2021 · 31 Aug · Shift 2 Numerical

At very high frequencies, the effective impedance of the given circuit will be _____ Ω.
(see the figure above)

Q26. At very high frequencies, the effective impedance of the given circuit will be _____ Ω.

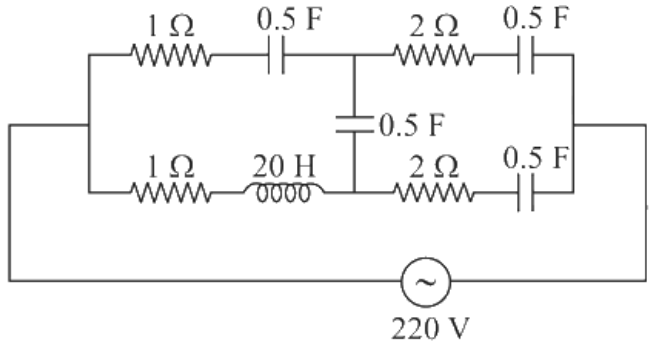

Numerical value type: the answer is a number.

Answer: 2. · Key from source paper

Q100 JEE Main 2021 · 27 Aug · Shift 1 Numerical

The alternating current is given by, $i = \left\{\sqrt{42}\sin\left(\frac{2\pi}{T}t\right) + 10\right\}$ A. The R.M.S. value of this current is _____ A.

Numerical value type: the answer is a number.

Answer: 11. · Key from source paper

Q101 JEE Main 2021 · 27 Aug · Shift 2 Numerical

An AC circuit has an inductor and a resistor of resistance R in series, such that $X_L = 3R$. Now, a capacitor is added in series such that $X_C = 2R$. the ratio of the new power factor with the old power factor of the circuit is $\sqrt{5} : x$. The value of x is

Numerical value type: the answer is a number.

Answer: 1. · Key from source paper

Q102 JEE Main 2021 · 26 Aug · Shift 1 MCQ

A series LCR circuit driven by $300\ \text{V}$ at a frequency of $50\ \text{Hz}$ contains a resistance $\text{R} = 3\ \text{k}\Omega$, an inductor of inductive reactance $\text{X}_\text{L} = 250\pi\ \Omega$ and an unknown capacitor. The value of capacitance to

maximise the average power should be:
(take $\pi^2 = 10$)

(A) $400\ \mu\text{F}$
(B) $4\ \mu\text{F}$
(C) $40\ \mu\text{F}$
(D) $25\ \mu\text{F}$

Answer: (B) $4\ \mu\text{F}$ · Key from source paper

Q103 JEE Main 2021 · 26 Aug · Shift 2 MCQ

In the given circuit the AC source has $\omega = 100\ \text{rad s}^{-1}$. Considering the inductor and capacitor to be ideal, what will be the current I flowing through the circuit?
(see the figure above)

Q15. In the given circuit the AC source has $\omega = 100\ \text{rad s}^{-1}$. Considering the inductor and capacitor to be ideal, what will be the current I flowing through the circuit?

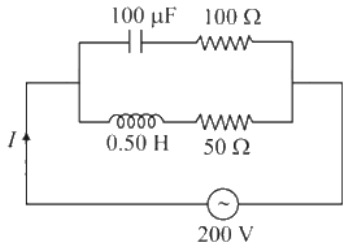

(1) $5.9\ \text{A}$
(2) $6\ \text{A}$
(3) $0.94\ \text{A}$
(4) $3.16\ \text{A}$

(A) $5.9\ \text{A}$
(B) $6\ \text{A}$
(C) $0.94\ \text{A}$
(D) $3.16\ \text{A}$

Answer: (D) $3.16\ \text{A}$ · Key from source paper

Q104 JEE Main 2021 · 26 Aug · Shift 2 Numerical

A circular coil of radius $8.0\ \text{cm}$ and 20 turns is rotated about its vertical diameter with an angular speed of $50\ \text{rad s}^{-1}$ in a uniform horizontal magnetic field of $3.0 \times 10^{-2}\ \text{T}$. The maximum emf induced in the coil will be _____$\times 10^{-2}$ volt (rounded off to the nearest integer).

Numerical value type: the answer is a number.

Answer: 60. · Key from source paper

Q105 JEE Main 2021 · 27 Jul · Shift 1 MCQ

A $0.07\ \text{H}$ inductor and a $12\ \Omega$ resistor are connected in series to a $220\ \text{V}$, $50\ \text{Hz}$ AC source. The approximate current in the circuit and the phase angle between current and source voltage are

respectively.
[Take π as $\frac{22}{7}$]

(A) $8.8\ \mathrm{A}$ and $\tan^{-1}\left(\frac{11}{6}\right)$
(B) $88\ \mathrm{A}$ and $\tan^{-1}\left(\frac{11}{6}\right)$
(C) $0.88\ \mathrm{A}$ and $\tan^{-1}\left(\frac{11}{6}\right)$
(D) $8.8\ \mathrm{A}$ and $\tan^{-1}\left(\frac{6}{11}\right)$

Answer: (A) $8.8\ \mathrm{A}$ and $\tan^{-1}\left(\frac{11}{6}\right)$ · Key from source paper

---

Q106 JEE Main 2021 · 27 Jul · Shift 2 MCQ

A 100Ω resistance, a $0.1\mu\mathrm{F}$ capacitor and an inductor are connected in series across a $250\ \mathrm{V}$ supply at variable frequency. Calculate the value of inductance of inductor at which resonance will occur. Given that the resonant frequency is $60\ \mathrm{Hz}$.

(A) $0.70\mathrm{H}$
(B) $70.3\ \mathrm{mH}$
(C) $7.03 \times 10^{-5}\mathrm{H}$
(D) $70.3\ \mathrm{H}$

Answer: (D) $70.3\ \mathrm{H}$ · Key from source paper

Q107 JEE Main 2021 · 25 Jul · Shift 2 MCQ

A $10\ \Omega$ resistance is connected across $220\ \mathrm{V} - 50\ \mathrm{Hz}$ AC supply. The time taken by the current to change from its maximum value to the rms value is:

(A) $2.5\ \mathrm{ms}$
(B) $1.5\ \mathrm{ms}$
(C) $3.0\ \mathrm{ms}$
(D) $4.5\ \mathrm{ms}$

Answer: (A) $2.5\ \mathrm{ms}$ · Key from source paper

Q108 JEE Main 2021 · 25 Jul · Shift 2 Numerical

Two circuits are shown in figure (a) and (b). At a frequency of _____ $\mathrm{rad\ s^{-1}}$ the average power dissipated in one cycle will be the same in both the circuits.
(see the figure above)

Q25. Two circuits are shown in figure (a) and (b). At a frequency of _____ rad s^{-1} the average power dissipated in one cycle will be the same in both the circuits.

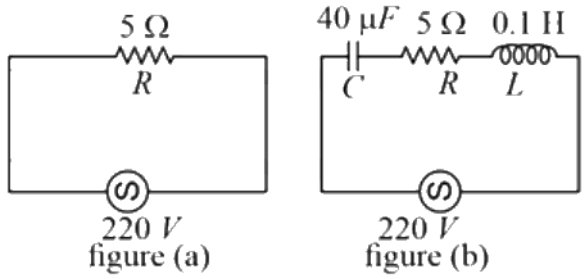

Numerical value type: the answer is a number.

Answer: 500. · Key from source paper

Q109 JEE Main 2021 · 22 Jul · Shift 1 MCQ

In a circuit consisting of a capacitance and a generator with alternating emf, $E_g = E_{g0} \sin \omega t$, V_C and I_C are the voltage and current. Correct phasor diagram for such circuit is

(see the figure above)

Q13. In a circuit consisting of a capacitance and a generator with alternating emf, $E_g = E_{go} sin\omega t$, V_C and I_C are the voltage and current. Correct phasor diagram for such circuit is

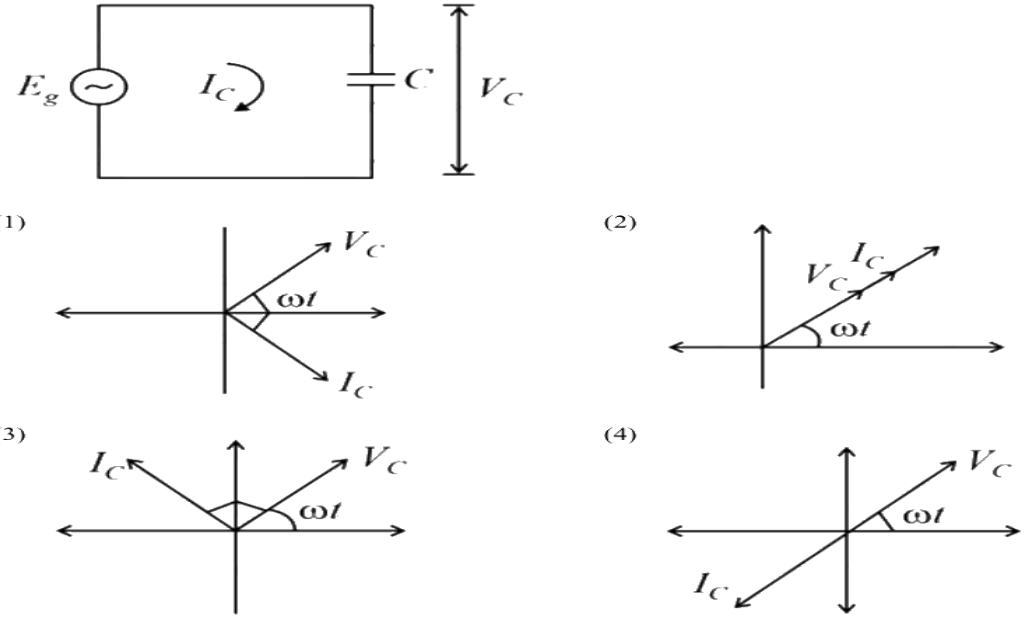

(A) *see figure*
(B) *see figure*
(C) *see figure*
(D) *see figure*

Answer: (C) · Key from source paper

Q110 JEE Main 2021 · 22 Jul · Shift 1 MCQ

Match List-I with List-II.

List - I

(a) $\omega L > \frac{1}{\omega C}$

(b) $\omega \mathrm{L} = \frac{1}{\omega C}$

(c) $\omega L < \frac{1}{\omega C}$

(d) Resonant frequency

List - II

(i) Current is in phase with emf

(ii) Current lags behind the applied emf

(iii) Maximum current occurs

(iv) Current leads the emf

Choose the correct answer from the options given below.

(A) (a) - (ii) ; (b) - (i) ; (c) - (iv) ; (d) - (iii)

(B) (a) - (ii) ; (b) - (i) ; (c) - (iii) ; (d) - (iv)

(C) (a) - (iii) ; (b) - (i) ; (c) - (iv); (d) - (ii)

(D) (a) - (iv) ; (b) - (iii) ; (c) - (ii); (d) - (i)

Answer: (A) (a) - (ii) ; (b) - (i) ; (c) - (iv) ; (d) - (iii) · Key from source paper

Q111 JEE Main 2021 · 20 Jul · Shift 1 Numerical

In LCR series circuit, an inductor $30\ \mathrm{mH}$ and a resistor $1\ \Omega$ are connected to an AC source of angular frequency $300\ \mathrm{rad\ s^{-1}}$. The value of capacitance for which the current leads the voltage by 45° is $\frac{1}{x} \times 10^{-3}\ \mathrm{F}$. Then the value of x is

Numerical value type: the answer is a number.

Answer: 3. · Key from source paper

Q112 JEE Main 2021 · 20 Jul · Shift 2 MCQ

For a series LCR circuit with $R = 100\ \Omega$, $L = 0.5\ \mathrm{mH}$ and $C = 0.1\ \mathrm{pF}$ connected across $220\ \mathrm{V} - 50\ \mathrm{Hz}$ AC supply, the phase angle between current and supplied voltage and the nature of the circuit is:

(A) 0°, resistive circuit

(B) $\approx 90^\circ$, predominantly inductive circuit

(C) 0°, resonance circuit

(D) $\approx 90^\circ$, predominantly capacitive circuit

Answer: (D) $\approx 90^\circ$, **predominantly capacitive circuit** · Key from source paper

Q113 JEE Main 2021 · 20 Jul · Shift 2 Numerical

A series LCR circuit of $R = 5\ \Omega$, $L = 20\ \mathrm{mH}$ and $C = 0.5\ \mu F$ is connected across an AC supply of $250\ V$, having variable frequency. The power dissipated at resonance condition is _____ $\times 10^2$ W.

Numerical value type: the answer is a number.

Answer: 125. · Key from source paper

Q114 JEE Main 2021 · 18 Mar · Shift 1 MCQ

In a scries LCR resonance circuit, if we change the resistance only, from a lower to higher value :

(A) The bandwidth of resonance circuit will increase.
(B) The resonance frequency will increase.
(C) The quality factor will increase.
(D) The quality factor and the resonance frequency will remain constant.

Answer: (A) The bandwidth of resonance circuit will increase. · Key from source paper

Q115 JEE Main 2021 · 18 Mar · Shift 1 MCQ

An AC source rated $220\ \mathrm{V}, 50\ \mathrm{Hz}$ is connected to a resistor. The time taken by the current to change from its maximum to the rms value is :

(A) $2.5\ \mathrm{ms}$
(B) $25\ \mathrm{ms}$
(C) $2.5\ \mathrm{s}$
(D) $0.25\ \mathrm{ms}$

Answer: (A) $2.5\ \mathrm{ms}$ · Key from source paper

Q116 JEE Main 2021 · 18 Mar · Shift 2 MCQ

In a series LCR circuit, the inductive reactance (X_L) is $10\ \Omega$ and the capacitive reactance (X_C) is $4\ \Omega$. The resistance (R) in the circuit is $6\ \Omega$. The power factor of the circuit is :

(A) $\frac{1}{2}$
(B) $\frac{1}{2\sqrt{2}}$
(C) $\frac{1}{\sqrt{2}}$
(D) $\frac{\sqrt{3}}{2}$

Answer: (C) $\frac{1}{\sqrt{2}}$ · Key from source paper

Q117 JEE Main 2021 · 17 Mar · Shift 1 MCQ

An AC current is given by $I = I_1 \sin \omega t + I_2 \cos \omega t$. A hot wire ammeter will give a reading:

EdLoop JEE

(A) $\sqrt{\frac{I_1^2-I_2^2}{2}}$

(B) $\sqrt{\frac{I_1^2+I_2^2}{2}}$

(C) $\frac{I_1+I_2}{\sqrt{2}}$

(D) $\frac{I_1+I_2}{2\sqrt{2}}$

Answer: (B) $\sqrt{\frac{I_1^2+I_2^2}{2}}$ · Key from source paper

Q118 JEE Main 2021 · 17 Mar · Shift 2 MCQ

Match List-I with List-II :

List-i

a. Phase difference between current and voltage in a purely resistive AC circuit

b. Phase difference between current and voltage in a pure inductive AC circuit

c. Phase difference between current and voltage in a pure capacitive AC circuit

d. Phase difference between current and voltage in an LCR series circuit

List-II

i. $\frac{\pi}{2}$; current leads voltage

ii. zero

iii. $\frac{\pi}{2}$; current lags voltage

iv. $\tan^{-1}\left(\frac{X_C-X_L}{R}\right)$

Choose the most appropriate answer from the options given below :

(A) (a) – (i), (b) – (iii), (c) – (iv), (d) – (ii)

(B) (a) – (ii), (b) – (iv), (c) – (iii), (d) – (i)

(C) (a) – (ii), (b) – (iii), (c) – (iv), (d) – (i)

(D) (a)-(ii), (b) – (iii), (c) – (i), (d) – (iv)

Answer: (D) (a)-(ii), (b) – (iii), (c) – (i), (d) – (iv) · Key from source paper

Q119 JEE Main 2021 · 17 Mar · Shift 2 MCQ

What happens to the inductive reactance and the current in a purely inductive circuit if the frequency is halved ?

(A) Both, inductive reactance and current will be halved.

(B) Inductive reactance will be halved and current will be doubled..

(C) Inductive reactance will be doubled and current will be halved.

(D) Both, inducting reactance and current will be doubled

Answer: (B) Inductive reactance will be halved and current will be doubled.. · Key from source paper

Q120 JEE Main 2021 · 16 Mar · Shift 1 Numerical

A sinusoidal voltage of peak value 250 V is applied to a series LCR circuit, in which $R = 8\Omega, L = 24\text{mH}$ and $C = 60\mu\text{F}$. The value of power dissipated at resonant condition is x kW. The value of x to

the nearest integer is _____.

Numerical value type: the answer is a number.

Answer: 4. · Key from source paper

Q121 JEE Main 2021 · 16 Mar · Shift 2 MCQ

For the given circuit, comment on the type of transformer used :
(see the figure above)

Q13. For the given circuit, comment on the type of transformer used :

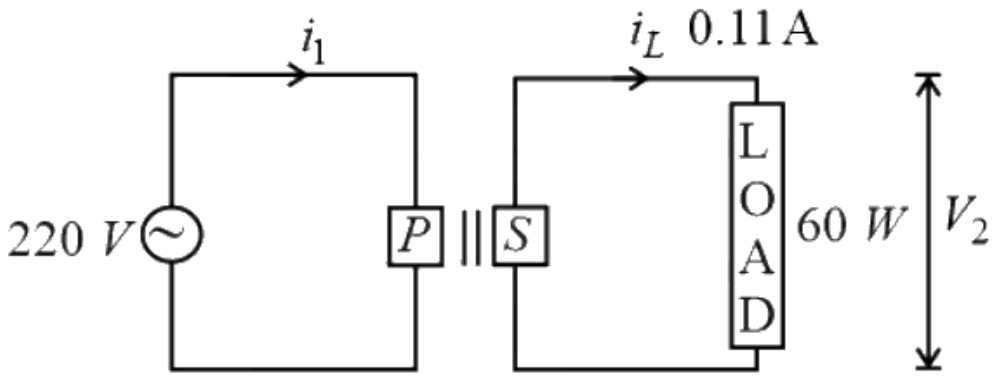

(1) Auxilliary transformer
(2) Auto transformer
(3) Step-up transformer
(4) Step down transformer

(A) Auxilliary transformer
(B) Auto transformer
(C) Step-up transformer
(D) Step down transformer

Answer: (C) Step-up transformer · Key from source paper

Q122 JEE Main 2021 · 26 Feb · Shift 1 MCQ

An alternating current is given by the equation $i = i_1 \sin \omega t + i_2 \cos \omega t$. The rms current will be:

(A) $\frac{1}{\sqrt{2}}(i_1 + i_2)^2$
(B) $\frac{1}{\sqrt{2}}(i_1 + i_2)$
(C) $\frac{1}{2}\left(i_1^2 + i_2^2\right)^{\frac{1}{2}}$
(D) $\frac{1}{\sqrt{2}}\left(i_1^2 + i_2^2\right)^{\frac{1}{2}}$

Answer: (D) $\frac{1}{\sqrt{2}}\left(i_1^2 + i_2^2\right)^{\frac{1}{2}}$ · Key from source paper

Q123 JEE Main 2021 · 26 Feb · Shift 1 Numerical

In a series LCR resonant circuit, the quality factor is measured as 100. If the inductance is increased by two fold and resistance is decreased by two fold, then the quality factor after this change will be

Numerical value type: the answer is a number.

Answer: 282.84. · Key from source paper

Q124 JEE Main 2021 · 26 Feb · Shift 2 MCQ

Find the peak current and resonant frequency of the following circuit (as shown in figure).
(see the figure above)

Q15. Find the peak current and resonant frequency of the following circuit (as shown in figure).

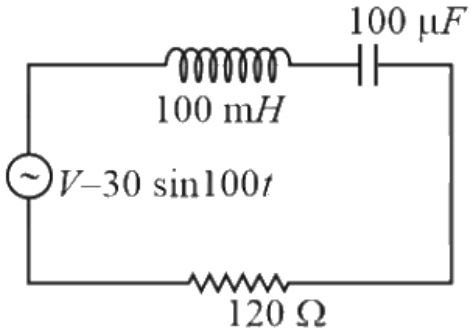

(1) 2 A and 50 Hz
(2) 0.2 A and 100 Hz
(3) 2 A and 100 Hz
(4) 0.2 A and 50 Hz

(A) 2 A and 50 Hz
(B) 0.2 A and 100 Hz
(C) 2 A and 100 Hz
(D) 0.2 A and 50 Hz

Answer: (D) 0.2 A and 50 Hz · Key from source paper

Q125 JEE Main 2021 · 25 Feb · Shift 1 MCQ

The angular frequency of alternating current in a L-C-R circuit is 100 $\mathrm{rad\ s^{-1}}$. The components connected are shown in the figure. Find the value of inductance of the coil and capacity of condenser.
(see the figure above)

Q14. The angular frequency of alternating current in a L-C-R circuit is 100 rad s^{-1}. The components connected are shown in the figure. Find the value of inductance of the coil and capacity of condenser.

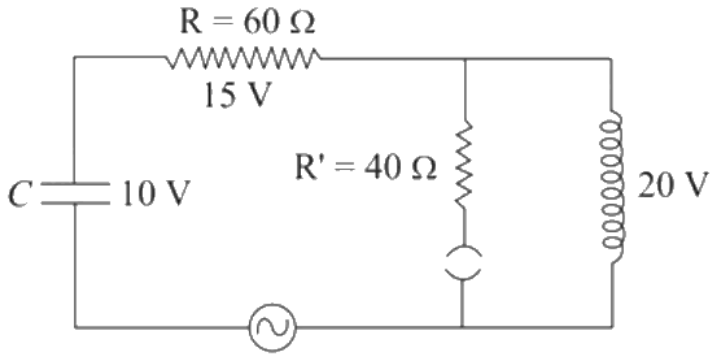

(1) 1.33 H and 150 μF
(2) 0.8 H and 150 μF
(3) 1.33 H and 250 μF
(4) 0.8 H and 250 μF

(A) 1.33 H and 150 μF
(B) 0.8 H and 150 μF
(C) 1.33 H and 250 μF
(D) 0.8 H and 250 μF

Answer: (D) 0.8 H and 250 μF · Key from source paper

Q126 JEE Main 2021 · 25 Feb · Shift 2 MCQ

An $L.C.R.$ circuit contains resistance of 110 Ω and a supply of 220 V at 300 rad s^{-1} angular frequency. If only capacitance is removed from the circuit, current lags behind the voltage by 45°. If on the other hand, only the inductor is removed the current leads by 45° with the applied voltage. The $R.M.S.$ current flowing in the circuit will be:

(A) 2.5 A
(B) 2 A
(C) 1 A
(D) 1.5 A

Answer: (B) 2 A · Key from source paper

Q127 JEE Main 2021 · 24 Feb · Shift 1 Numerical

A common transistor radio set requires 12 V D.C. for its operation. The D.C. source is constructed by using a transformer and a rectifier circuit, which are operated at 220 V A.C. on standard domestic A.C. supply. The number of turns of secondary coil are 24, then the number of turns of primary are

Numerical value type: the answer is a number.

Answer: 440. · Key from source paper

Q128 JEE Main 2021 · 24 Feb · Shift 1 Numerical

A resonance circuit having inductance and resistance 2×10^{-4} H and $6.28\ \Omega$ respectively oscillates at 10 MHz frequency. The value of quality factor of this resonator is _____. $\pi = 3.14$

Numerical value type: the answer is a number.

Answer: 2000. · Key from source paper

Q129 JEE Main 2021 · 24 Feb · Shift 2 Numerical

A series LCR circuit is designed to resonate at an angular frequency $\omega_0 = 10^5\ \text{rad s}^{-1}$. The circuit draws 16 W power from 120 V source at resonance. The value of resistance R in the circuit is _____ Ω

.

Numerical value type: the answer is a number.

Answer: 900. · Key from source paper

Q130 JEE Main 2020 · 6 Sep · Shift 1 MCQ

An AC circuit has $\text{R} = 100\Omega$, $\text{C} = 2\mu\text{F}$ and $\text{L} = 80$ mH, connected in series. The quality factor of the circuit is :

(A) 2
(B) 0.5
(C) 20
(D) 400

Answer: (A) 2 · Key from source paper

Q131 JEE Main 2020 · 6 Sep · Shift 2 Numerical

In a series LR circuit, power of 400 W is dissipated from a source of 250 V, 50 Hz. The power factor of the circuit is 0.8. In order to bring the power factor to unity, a capacitor of value C is added in series to the L and R. Taking the value of C as $\left(\frac{n}{3\pi}\right)\ \mu\text{F}$, then value of n is

Numerical value type: the answer is a number.

Answer: 400. · Key from source paper

Q132 JEE Main 2020 · 5 Sep · Shift 1 MCQ

An electrical power line, having a total resistance of 2Ω, delivers 1 kW at 220 V. The efficiency of the transmission line is approximately :

(A) 72%
(B) 91%
(C) 85%
(D) 96%

Answer: (D) 96% · Key from source paper

Q133 JEE Main 2020 · 3 Sep · Shift 1 MCQ

A $750\ \mathrm{Hz}$, $20\ \mathrm{V(rms)}$ source is connected to a resistance of $100\ \Omega$, an inductance of $0.1803\ \mathrm{H}$ and a capacitance of $10\ \mu F$ all in series. The time in which the resistance (heat capacity $2\ \mathrm{J/^\circ C}$) will get heated by $10^\circ\mathrm{C}$. (assume no loss of heat to the surroundings) is close to :

(A) $418\ \mathrm{s}$
(B) $245\ \mathrm{s}$
(C) $365\ \mathrm{s}$
(D) $348\ \mathrm{s}$

Answer: (D) $348\ \mathrm{s}$ · Key from source paper

Q134 JEE Main 2020 · 2 Sep · Shift 1 Numerical

A circular coil of radius $10\ \mathrm{cm}$ is placed in a uniform magnetic field of $3.0 \times 10^{-5}\ \mathrm{T}$ with its plane perpendicular to the field initially. It is rotated at constant angular speed about an axis along the diameter of coil and perpendicular to magnetic field so that it undergoes half of rotation in $0.2\ \mathrm{s}$. The maximum value of EMF induced (in $\mu\mathrm{V}$) in the coil will be close to the integer....

Numerical value type: the answer is a number.

Answer: 15. · Key from source paper

Q135 JEE Main 2020 · 2 Sep · Shift 2 MCQ

An inductance coil has an impedance of $100\ \Omega$. When an AC signal of frequency $1000\ \mathrm{Hz}$ is applied to the coil, the applied voltage leads the current by 45°. The self-inductance of the coil is

(A) $1.1 \times 10^{-2}\ \mathrm{H}$
(B) $1.1 \times 10^{-1}\ \mathrm{H}$
(C) $5.5 \times 10^{-5}\ \mathrm{H}$
(D) $6.7 \times 10^{-7}\ \mathrm{H}$

Answer: (A) $1.1 \times 10^{-2}\ \mathrm{H}$ · Key from source paper

Q136 JEE Main 2020 · 9 Jan · Shift 2 MCQ

In LC circuit the inductance $L = 40\ \mathrm{mH}$ and capacitance $C = 100\ \mu\mathrm{F}$. If a voltage $V(t) = 10\sin(314t)$ is applied to the circuit, the current in the circuit is given as:

(A) $0.52\ \cos(314t)$
(B) $10\ \cos(314t)$
(C) $5.2\ \cos(314t)$
(D) $0.52\ \sin(314t)$

Answer: (A) $0.52\ \cos(314t)$ · Key from source paper

Q137 JEE Main 2019 · 10 Apr · Shift 1 MCQ

A transformer consisting of 300 turns in the primary and 150 turns in the secondary gives output power of $2.2\ \mathrm{kW}$. If the current in the secondary coil is $10\ \mathrm{A}$, then the input voltage and current in the primary coil are:

(A) $440\ \mathrm{V}$ and $20\ \mathrm{A}$
(B) $220\ \mathrm{V}$ and $20\ \mathrm{A}$
(C) $440\ \mathrm{V}$ and $5\ \mathrm{A}$
(D) $220\ \mathrm{V}$ and $10\ \mathrm{A}$

Answer: (C) $440\ \mathrm{V}$ and $5\ \mathrm{A}$ · Key from source paper

---

Q138 JEE Main 2019 · 8 Apr · Shift 1 MCQ

An alternating voltage $V(t) = 220 \sin 100\pi t$ volt is applied to a purely resistive load of 50 Ω. The time taken for the current to rise from half of the peak value to the peak value is:

(A) 7.21 ms
(B) 5.25 ms
(C) 2.24 ms
(D) 3.33 ms

Answer: (D) 3.33 ms · Key from source paper

Q139 JEE Main 2019 · 8 Apr · Shift 2 MCQ

A circuit connected to an ac source of emf e = $e_0$sin100t with t in seconds, gives a phase difference of $\frac{\pi}{4}$ between the emf e and current i . Which of the following circuits will exhibit this?

(A) RC circuit with R = 1 kΩ and C = 1 μF
(B) RL circuit with R = 1 kΩ and L = 1 mH
(C) RL circuit with R = 1 kΩ and L = 10 mH
(D) RC circuit with R = 1 kΩ and C = 10 μF

Answer: (D) RC circuit with R = 1 kΩ and C = 10 μF · Key from source paper

---

Q140 JEE Main 2019 · 12 Jan · Shift 2 MCQ

see figure

Q21.

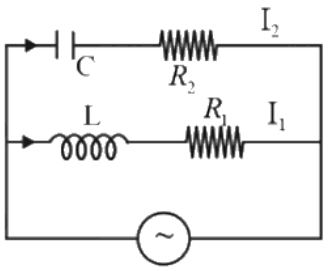

In the above circuit, $C = \frac{\sqrt{3}}{2}\mu F$, $R_2 = 20\ \Omega$, $L = \frac{\sqrt{3}}{10}H$ and $R_1 = 10\ \Omega$. Current in L-R_1 path is I_1 and in C-R_2 path it is I_2. The voltage of AC source is given by, $V = 200\sqrt{2}\sin(100\,t)$ volts. The phase difference between I_1 and I_2 is:

(1) 60° (2) 0°
(3) 30° (4) 150°

(A) 60°
(B) 0°
(C) 30°
(D) 150°

Answer: (D) 150° · Key from source paper

Q141 JEE Main 2019 · 9 Jan · Shift 2 MCQ

A power transmission line feeds input power at $2300\ \text{V}$ to a step down transformer with its primary windings having 4000 turns. The output power is delivered at $230\ \text{V}$ by the transformer. If the current in the primary of the transformer is $5\ \text{A}$ and its efficiency is $90\ \%$, the output current would be:

(A) $35\ \text{A}$
(B) $25\ \text{A}$
(C) $50\ \text{A}$
(D) $45\ \text{A}$

Answer: (D) $45\ \text{A}$ · Key from source paper

Q142 JEE Main 2019 · 9 Jan · Shift 2 MCQ

A series AC circuit containing an inductor $(20\ \text{mH})$, a capacitor $(120\ \mu\text{F})$ and a resistor $(60\ \Omega)$ is driven by an AC source of $24\ \text{V}/50\ \text{Hz}$. The energy dissipated in the circuit in $60\ \text{s}$ is:

(A) $5.17 \times 10^2\ \text{J}$
(B) $3.39 \times 10^3\ \text{J}$
(C) $2.26 \times 10^3\ \text{J}$
(D) $5.65 \times 10^2\ \text{J}$

Answer: (A) $5.17 \times 10^2\ \text{J}$ · Key from source paper

Q143 JEE Main 2018 · 16 Apr · Online MCQ

A coil of cross-sectional area A having n turns is placed in a uniform magnetic field B. When it is rotated with an angular velocity ω, the maximum e.m.f. induced in the coil will be:

(A) $\frac{3}{2}nBA\omega$
(B) $3nBA\omega$
(C) $nBA\omega$
(D) $\frac{1}{2}nBA\omega$

Answer: (C) $nBA\omega$ · Key from source paper

Q144 JEE Main 2018 · 16 Apr · Online MCQ

A power transmission line feeds input power at 2300 V to a step-down transformer with its primary windings having 4000 turns giving the output power at 230 V. If the current in the primary coil of the transformer is 5 A and its efficiency is $90\ \%$, the output current would be:

(A) 45 A
(B) 50 A
(C) 20 A
(D) 25 A

Answer: (A) 45 A · Key from source paper

Q145 JEE Main 2018 · 8 Apr · Offline MCQ

For an RLC circuit driven with voltage of amplitude v_m and frequency $\omega_0 = \frac{1}{\sqrt{LC}}$ the current exhibits resonance. The quality factor, Q is given by

(A) $\frac{CR}{\omega_0}$
(B) $\frac{\omega_0 L}{R}$
(C) $\frac{\omega_0 R}{L}$
(D) $\frac{R}{(\omega_0 C)}$

Answer: (B) $\frac{\omega_0 L}{R}$ · Key from source paper

Q146 JEE Main 2018 · 8 Apr · Offline MCQ

In an A.C. circuit, the instantaneous e.m.f. and current are given by, $E = 100\sin 30t$, $I = 20\sin\left(30t - \frac{\pi}{4}\right)$. In one cycle of A.C., the average power consumed by the circuit (in watt) and the watt-less current (in ampere) are, respectively:

(A) $50,\ 0$
(B) $50,\ 10$
(C) $\frac{1000}{\sqrt{2}},\ 10$
(D) $\frac{50}{\sqrt{2}},\ 0$

Answer: (C) $\frac{1000}{\sqrt{2}},\ 10$ · Key from source paper

---

Q147 JEE Main 2017 · 9 Apr · Online MCQ

A sinusoidal voltage of peak value 283 V and angular frequency $320\ \text{s}^{-1}$ is applied to a series LCR circuit. Given that $R = 5\ \Omega$, $L = 25\ \text{mH}$ and $C = 1000\ \mu\text{F}$. The total impedance and phase difference between the voltage across the source and the current will respectively be-

(A) $10\ \Omega$ and $\tan^{-1}\left(\frac{5}{3}\right)$
(B) $7\ \Omega$ and 45°
(C) $7\ \Omega$ and $\tan^{-1}\left(\frac{5}{3}\right)$
(D) $10\ \Omega$ and $\tan^{-1}\left(\frac{8}{3}\right)$

Answer: (B) $7\ \Omega$ and 45° · Key from source paper

Q148 JEE Main 2016 · 3 Apr · Offline MCQ

An arc lamp requires a direct current of 10 A at 80 V to function. If it is connected to a 220 V (rms), 50 Hz AC supply, the series inductor needed for it to work is close to:

(A) 0.044 H
(B) 0.065 H
(C) 80 H
(D) 0.08 H

Answer: (B) 0.065 H · Key from source paper

Q149 JEE Main 2015 · 11 Apr · Online MCQ

The AC voltage across a resistance can be measured using a:

(A) Moving magnet galvanometer
(B) Moving coil galvanometer
(C) Hot wire voltmeter
(D) Potentiometer

Answer: (C) Hot wire voltmeter · Key from source paper

Q150 JEE Main 2015 · 11 Apr · Online MCQ

For the LCR circuit, shown here, the current is observed to lead the applied voltage. An additional capacitor C' , when joined with the capacitor C present in the circuit, makes the power factor of the circuit unity. The capacitor C' , must have been connected in:

(see the figure above)

Q23. For the LCR circuit, shown here, the current is observed to lead the applied voltage. An additional capacitor C' , when joined with the capacitor C present in the circuit, makes the power factor of the circuit unity. The capacitor C' , must have been connected in:

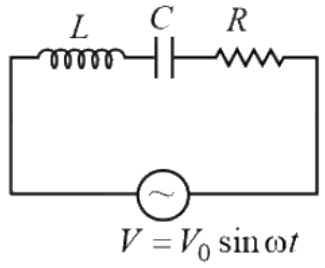

(1) Parallel with C and has a magnitude $\frac{1-\omega^2LC}{\omega^2L}$

(2) Series with C and has a magnitude $\frac{1-\omega^2LC}{\omega^2L}$

(3) Series with C and has a magnitude $\frac{C}{(\omega^2LC-1)}$

(4) Parallel with C and has a magnitude $\frac{C}{(\omega^2LC-1)}$

(A) Parallel with C and has a magnitude $\frac{1-\omega^2LC}{\omega^2L}$

(B) Series with C and has a magnitude $\frac{1-\omega^2LC}{\omega^2L}$

(C) Series with C and has a magnitude $\frac{C}{(\omega^2LC-1)}$

(D) Parallel with C and has a magnitude $\frac{C}{(\omega^2LC-1)}$

Answer: (A) Parallel with C and has a magnitude $\frac{1-\omega^2LC}{\omega^2L}$ · Key from source paper

Q151 JEE Main 2014 · 12 Apr · Online MCQ

A sinusoidal voltage $\mathrm{V(t)} = 100\sin(500\mathrm{t})$ is applied across a pure inductance of $L = 0.02\mathrm{H}$. The current through the coil is:

(A) $10\cos(500\mathrm{t})$

(B) $-10\cos(500\mathrm{t})$

(C) $10\sin(500t)$

(D) $-10\sin(500t)$

Answer: (B) $-10\cos(500\mathrm{t})$ · Key from source paper

Q152 JEE Main 2014 · 9 Apr · Online MCQ

When the rms voltages V_L, V_C and V_R are measured respectively across the inductor L, the capacitor C and the resistor R in a series LCR circuit connected to an AC source, it is found that the ratio $V_L : V_C : V_R = 1 : 2 : 3$. If the rms voltage of the AC source is 100 V, then V_R is close to :

(A) 50 V
(B) 70 V
(C) 100 V
(D) 90 V

Answer: (D) 90 V · Key from source paper

Q153 JEE Main 2013 · 25 Apr · Online MCQ

When resonance is produced in a series LCR circuit, then which of the following is not correct?

(A) Current in the circuit is in phase with the applied voltage.
(B) Inductive and capacitive reactances are equal.
(C) If R is reduced, the voltage across capacitor will increase.
(D) Impedance of the circuit is maximum.

Answer: (D) Impedance of the circuit is maximum. · Key from source paper

---

Q154 JEE Main 2013 · 25 Apr · Online MCQ

A series LR circuit is connected to an ac source of frequency ω and the inductive reactance is equal to 2R. A capacitance of capacitive reactance equal to R is added in series with L and R. The ratio of the new power factor to the old one is :

(A) $\sqrt{\frac{2}{3}}$
(B) $\sqrt{\frac{2}{5}}$
(C) $\sqrt{\frac{3}{2}}$
(D) $\sqrt{\frac{5}{2}}$

Answer: (D) $\sqrt{\frac{5}{2}}$ · Key from source paper

Q155 JEE Main 2013 · 23 Apr · Online MCQ

The plot given below is of the average power delivered to an LRC circuit versus frequency. The quality factor
(see the figure above)
of the circuit is :

Q21. The plot given below is of the average power delivered to an LRC circuit versus frequency. The quality factor

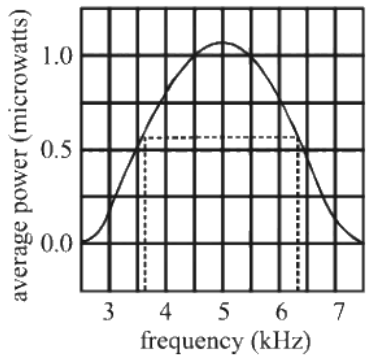

of the circuit is :

(1) 5.0
(2) 2.0
(3) 2.5
(4) 0.4

(A) 5.0
(B) 2.0
(C) 2.5
(D) 0.4

Answer: (B) 2.0 · Key from source paper

Q156

JEE Main 2013 · 22 Apr · Online · MCQ

An LCR circuit as shown in the figure is connected to a voltage source V_{ac} whose frequency can be varied. The frequency, at which the voltage across the resistor is maximum, is :

(see the figure above)

Q21. An LCR circuit as shown in the figure is connected to a voltage source V_{ac} whose frequency can be varied.

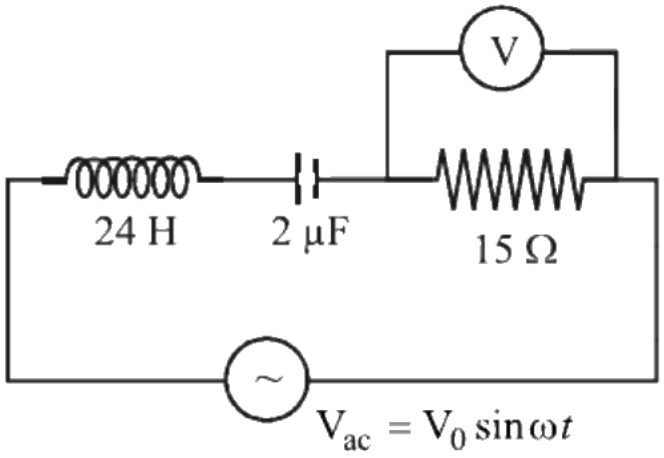

The frequency, at which the voltage across the resistor is maximum, is :

(1) 902 Hz
(2) 143 Hz
(3) 23 Hz
(4) 345 Hz

(A) $902\ \mathrm{Hz}$
(B) $143\ \mathrm{Hz}$
(C) $23\ \mathrm{Hz}$
(D) $345\ \mathrm{Hz}$

Answer: (C) $23\ \mathrm{Hz}$ · Key from source paper

Q157 JEE Main 2013 · 22 Apr · Online MCQ

In a series $\mathrm{L}-\mathrm{C}-\mathrm{R}$ circuit, $\mathrm{C}=10^{-11}$ Farad, $\mathrm{L}=10^{-5}$ Henry and $\mathrm{R}=100$Ohm, when a constant D.C. voltage E is applied to the circuit, the capacitor acquires a charge $10^{-9}\ \mathrm{C}$. The D.C. source is replaced by a sinusoidal voltage source in which the peak voltage E_0 is equal to the constant D.C. voltage E. At resonance the peak value of the charge acquired by the capacitor will be :

(A) $10^{-15}\mathrm{C}$
(B) $10^{-6}\mathrm{C}$
(C) $10^{-10}\mathrm{C}$
(D) $10^{-8}\mathrm{C}$

Answer: (D) $10^{-8}\mathrm{C}$ · Key from source paper

Q158 JEE Main 2013 · 9 Apr · Online MCQ

In the circuit shown here, the voltage across E and C are respectively 300 V and 400 V. The voltage E of the ac source is :

(A) 400 Volt
(B) 500 Volt
(C) 100 Volt
(D) 700 Volt

Answer: (C) 100 Volt · Key from source paper

Q159 AIEEE 2012 · 7 May · Online MCQ

In an LCR circuit shown in the following figure, what will be the readings of the voltmeter across the resistor and ammeter if an a.c. source of 220 V and 100 Hz is connected to it as shown?
(see the figure above)

EdLoop JEE

Q22. In an LCR circuit shown in the following figure, what will be the readings of the voltmeter across the resistor and ammeter if an a.c. source of 220 V and 100 Hz is connected to it as shown?

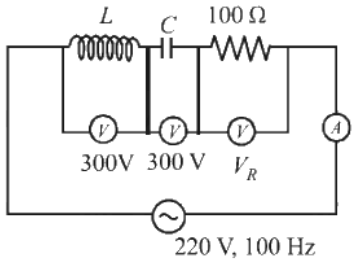

(1) 800 V, 8 A
(2) 110 V, 1.1 A
(3) 300 V, 3 A
(4) 220 V, 2.2 A

(A) 800 V, 8 A
(B) 110 V, 1.1 A
(C) 300 V, 3 A
(D) 220 V, 2.2 A

Answer: (D) 220 V, 2.2 A · Key from source paper

Q160 AIEEE 2010 MCQ

In a series LCR circuit $R = 200\Omega$ and the voltage and the frequency of the main supply is 220 V and 50 Hz respectively. On taking out the capacitance from the circuit the current lags behind the voltage by 30°. On taking out the inductor from the circuit the current leads the voltage by 30°. The power dissipated in the LCR circuit is

(A) 305 W
(B) 210 W
(C) Zero W
(D) 242 W

Answer: (D) 242 W · Key from source paper

Q161 AIEEE 2007 MCQ

In an a.c. circuit the voltage applied is $\mathrm{E} = \mathrm{E}_0 \sin\omega\mathrm{t}$. The resulting current in the circuit is $\mathrm{I} = \mathrm{I}_0 \sin\left(\omega\mathrm{t} - \frac{\pi}{2}\right)$. The power consumption in the circuit is given by

(A) $\mathrm{P} = \frac{\mathrm{E}_0\mathrm{I}_0}{\sqrt{2}}$
(B) P = zero
(C) $\mathrm{P} = \frac{\mathrm{E}_0\mathrm{I}_0}{2}$
(D) $\mathrm{P}\sqrt{2}\mathrm{E}_0\mathrm{I}_0$

Answer: (B) P = zero · Key from source paper

Q162 AIEEE 2006 MCQ

In an AC generator, a coil with N turns, all of the same area A and total resistance R, rotates with frequency ω in a magnetic field B. The maximum value of emf generated in the coil is "

(A) N.A.B. ω
(B) N.A.B.R. ω
(C) N.A.B
(D) N.A.B.R

Answer: (A) N.A.B. ω · Key from source paper

Q163 AIEEE 2006 MCQ

In a series resonant LCR circuit, the voltage across R is 100 volts and $R = 1\text{k}\Omega$ with $C = 2\mu\text{F}$. The resonant frequency ω is 200rad/s. At resonance the voltage across L is

(A) 4×10^{-3} V
(B) 2.5×10^{-2} V
(C) 40 V
(D) 250 V

Answer: (D) 250 V · Key from source paper

Q164 AIEEE 2005 MCQ

The self inductance of the motor of an electric fan is 10H. In order to impart maximum power at 50 Hz, it should be connected to a capacitance of

(A) $C = 4\mu F$
(B) $C = 8\mu F$
(C) $C = 1\mu F$
(D) $C = 2\mu F$

Answer: (C) $C = 1\mu F$ · Key from source paper

Q165 AIEEE 2005 MCQ

A circuit has a resistance of 12Ω and an impedance of 15Ω. The power factor of the circuit will be

(A) 0.8
(B) 0.4
(C) 1.25
(D) 0.125

Answer: (A) 0.8 · Key from source paper

EdLoop JEE

Q166 AIEEE 2005 MCQ

The phase difference between the alternating current and emf is $\pi/2$. Which of the following cannot be the constituent of the circuit?

(A) C alone
(B) R.L
(C) L.C
(D) L alone

Answer: (B) R.L · Key from source paper

Q167 AIEEE 2004 MCQ

In a uniform magnetic field of induction B a wire in the form of semicircle of radius r rotates about the diameter of the circle with angular frequency ω. The axis of rotation is perpendicular to the field. If the total resistance of the circuit is R the mean power generated per period of rotation is

(A) $\frac{B\pi r^2\omega}{2R}$
(B) $\frac{(B\pi r^2\omega)^2}{8R}$
(C) $\frac{(\mathrm{B}\pi \mathrm{r}\omega)^2}{2\mathrm{R}}$
(D) $\frac{(B\pi r\omega^2)^2}{8R}$

Answer: (B) $\frac{(B\pi r^2\omega)^2}{8R}$ · Key from source paper

Q168 AIEEE 2004 MCQ

Alternating current can not be measured by D.C. ammeter because

(A) A.C. cannot pass through D.C.
(B) A.C. changes direction
(C) average value of current for complete cycle is zero
(D) D.C. ammeter will get damaged.

Answer: (C) average value of current for complete cycle is zero · Key from source paper

Q169 AIEEE 2004 MCQ

In an LCR series a.c. circuit, the voltage across each of the components, L, C and R is 50 V. The voltage across the LC combination will be

(A) 50 V
(B) $50\sqrt{2}$ V
(C) 100 V
(D) 0 V (zero)

Answer: (D) 0 V (zero) · Key from source paper

Q170 AIEEE 2004 MCQ

In a LCR circuit capacitance is changed from C to $2C$. For the resonant frequency to remain unchanged, the inductance should be changed from L to

(A) 4 L
(B) 2 L
(C) L/2
(D) L/4

Answer: (C) L/2 · Key from source paper

Q171 AIEEE 2003 MCQ

The core of any transformer is laminated so as to

(A) reduce the energy loss due to eddy currents
(B) make it light weight
(C) make it robust and strong
(D) increase the secondary voltage

Answer: (A) reduce the energy loss due to eddy currents · Key from source paper

Q172 AIEEE 2002 MCQ

The power factor of an AC circuit having resistance (R) and inductance (L) connected in series and an angular velocity ω is

(A) $\mathrm{R}/\omega\mathrm{L}$
(B) $\mathrm{R}/(\mathrm{R}^2+\omega^2\mathrm{L}^2)^{1/2}$
(C) $\omega\mathrm{L}/\mathrm{R}$
(D) $R/\left(R^2-\omega^2L^2\right)^{1/2}$

Answer: (B) $\mathrm{R}/(\mathrm{R}^2+\omega^2\mathrm{L}^2)^{1/2}$ · Key from source paper

Q173 AIEEE 2002 MCQ

In a transformer, number of turns in the primary coil are 140 and that in the secondary coil are 280. If current in primary coil is 4 A, then that in the secondary coil is

(A) 4 A
(B) 2 A
(C) 6 A
(D) 10 A

Answer: (B) 2 A · Key from source paper