EdLoop

EdLoop JEE

PHYSICS · JEE MAIN

Capacitors

Previous Year Questions with answers

182 questions · **148** papers · **2002–2026** · newest paper first

Step-by-step solutions for every question: free in the EdLoop JEE app (Google Play) · pyq.edloop.in

What is in this PDF: every Capacitors question we hold from past JEE Main and AIEEE papers, with its options and answer. Where an answer comes from a source other than the official final key, it says so next to the answer.

Step-by-step solutions for every question are free in the EdLoop JEE app (Google Play) and on app.edloop.in. More chapters: pyq.edloop.in/free-pdfs/

EdLoop

Chapter at a glance

3.1%	182	119 of 162	133 / 49
of Physics questions, 2019–2026	questions, 2002–2026	papers asked it, 2019–2026	MCQ / numerical, 2002–2026

Trend. Steady: 0.8 questions per paper in 2024–2026 against 0.9 in 2019–2023.

Questions per year

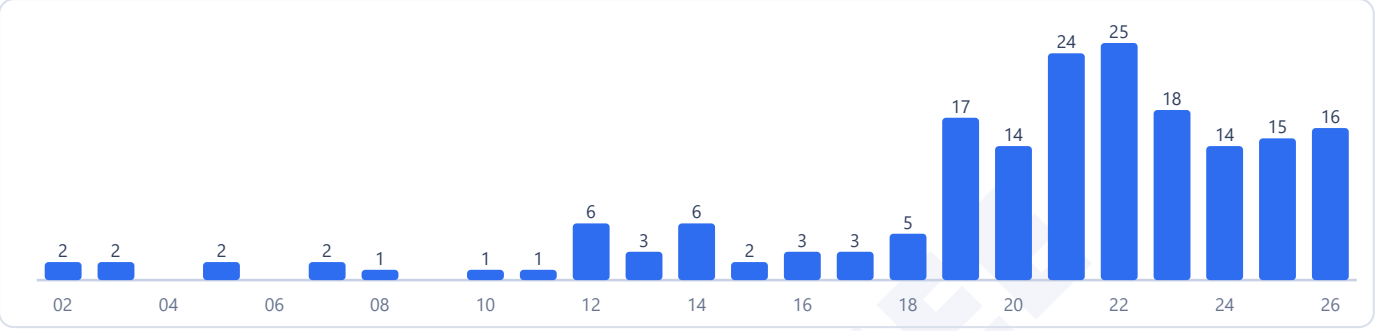

Counts are the questions we hold: 182 in 148 papers. No question in this chapter was found repeated across papers.

Most-asked topics in this chapter (2002–2026)



How often it comes up

Capacitors connect electrostatic theory with electric circuits in the Class 12 syllabus under NTA Unit 11 (Electrostatics). It holds rank 17 among the 29 physics chapters. During the computer-based era from 2019 to 2026, candidates faced 143 capacitor problems in 162 testing sessions, representing roughly 0.9 questions per paper. The chapter was present in 119 of those 162 papers, showing up consistently across testing seasons with questions asked every year. In the three years spanning 2024 to 2026, 45 questions appeared across 58 test papers, yielding an average of 0.8 questions per shift and a 2.9 percent share. The chapter's share has stayed about the same when compared to the 2002 to 2018 window, which also logged a 2.9 percent share with 39 questions in 38 tests. In 2026 alone, examiners included 16 capacitor problems across 19 papers, featured in 13 separate sessions. Notably, 49 questions from 2019 to 2026 required numerical answers, meaning about a third of all capacitor problems demand final numerical computation rather than option elimination.

Most-asked topics

The question pool divides across four core areas:

- **Dielectrics**: 63 questions historically, including 52 from 2019 to 2026, continuing through 2026. Frequent problems evaluate partial slab insertion, composite dielectric arrangements with multiple slabs in series or parallel, and energy changes when slabs enter with or without a connected battery.
- **Combinations**: 61 problems overall, with 47 between 2019 and 2026, tested up to 2026. This topic covers equivalent capacitance in bridge networks, symmetric ladder circuits, charge redistribution between disconnected or reconnected capacitors, and common potential calculations.
- **RC Circuits**: 37 questions since 2002, with 29 appearing from 2019 to 2026, asked in 2026. Questions explore DC transient charging and discharging, exponential time constants, and steady-state currents where fully charged

capacitors act as open circuits.

- **Capacitance**: 21 lifetime problems, with 15 between 2019 and 2026, tested in 2026. Focus areas involve parallel plate geometry, pulling plates apart at constant charge or voltage, spherical and cylindrical capacitors, and mechanical electrostatic pressure.

What the questions look like

Capacitor questions in JEE Main generally feature clear circuit diagrams and structured algebraic relations:

- **Composite dielectric slabs**: Slabs of varying thickness and dielectric constant fill specific fractions of the gap between parallel plates. Students must model the system as combinations of sub-capacitors connected in series or parallel.
- **Charge sharing between capacitors**: A capacitor charged to an initial voltage connects across another capacitor that is uncharged or charged with opposite polarity. Calculations determine final common voltages, individual charges, or heat dissipated during redistribution.
- **Steady-state DC circuit analysis**: Circuits containing combinations of resistors and capacitors powered by a DC source. Candidates replace capacitors with open branches to determine branch currents and potential drops across specific elements.
- **Dynamic plate movement**: Evaluating the work done by external forces or the rate of energy exchange as capacitor plates separate at constant velocity while connected to a supply.

How to practise it

Master the distinction between isolated and battery-connected capacitors. When disconnected from a source, the stored charge Q stays constant while potential difference V and stored energy adjust with capacitance changes. When connected to a battery, voltage V remains fixed while charge Q and energy scale directly with capacitance.

Pay special attention to equivalent capacitance when dielectric slabs fill portions of the gap. If slabs divide the gap perpendicular to the plates, treat them as series capacitances. If they divide the plate area parallel to the plates, treat them as parallel capacitances. Practice drawing equivalent circuits with labeled node voltages to break down complex networks.

For transient circuits, be confident with the exponential charging and discharging equations. Know that at time zero an uncharged capacitor acts as a short circuit with zero voltage drop, while in the infinite time limit it acts as an open circuit blocking DC current.

EdLoop JEE

Q1 JEE Main 2026 · 8 Apr · Shift 2 Numerical

A parallel plate capacitor is having separation between plates 0.885 mm. It has a capacitance of 1 μF when the space between the plates is filled with an insulating material of resistivity 1×10^{13} Ωm and resistance 17.7×10^{14} Ω. Relative permittivity of the insulating material is $\alpha \times 10^{7}$. The value of α is _____.

(Take permittivity of free space $= 8.85 \times 10^{-12}$ F/m)

Numerical value type: the answer is a number.

Answer: 2. · Official NTA final key

Q2 JEE Main 2026 · 8 Apr · Shift 2 Numerical

The stored charge in the capacitor in steady state of the following circuit is _____ μC.

(see the figure above)

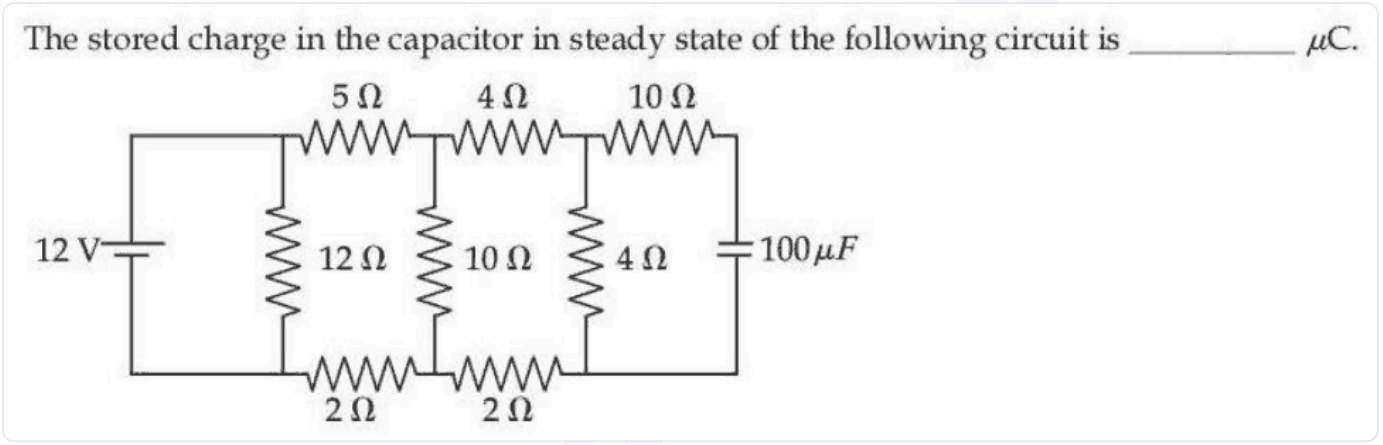

Numerical value type: the answer is a number.

Answer: 200. · Official NTA final key

Q3 JEE Main 2026 · 6 Apr · Shift 2 MCQ

A sphere of capacitance 100 pF is charged to a potential of 100 V. Another identical uncharged metal sphere is brought in contact with the charged sphere, then the change in the total energy stored on these spheres, when they touch is $\alpha \times 10^{-7}$ J. The value of α is _____.

(combined capacitance of spheres is 200 pF)

(A) 5

(B) $\frac{5}{2}$

(C) $\frac{7}{2}$

(D) $\frac{9}{2}$

Answer: (B) $\frac{5}{2}$ · Official NTA final key

Q4 JEE Main 2026 · 5 Apr · Shift 2 MCQ

Under steady state condition the potential difference across the capacitor in the circuit is _____ V.

(see the figure above)

Under steady state condition the potential difference across the capacitor in the circuit is _____ V.

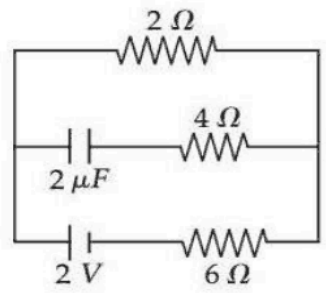

Options :

6911211660. 0.5

6911211661. 1.5

6911211662. 0

6911211663. 2

(A) 0.5
(B) 1.5
(C) 0
(D) 2

Answer: (A) 0.5 · Official NTA final key

Q5 JEE Main 2026 · 4 Apr · Shift 1 MCQ

A parallel plate air capacitor is connected to a battery. The plates are pulled apart at uniform speed v. If x is the separation between the plates at any instant, then the time rate of change of electrostatic energy of the capacitor is proportional to x^{α}, where α is _____.

(A) -2
(B) 1
(C) -1
(D) 2

Answer: (A) -2 · Official NTA final key

Q6 JEE Main 2026 · 4 Apr · Shift 1 MCQ

Consider a circuit consisting of a capacitor (20 μF), resistor (100 Ω) and two identical diodes as shown in figure. The resistance of diode under forward biasing condition is 10 Ω. The time constant of the circuit is $\alpha \times 10^{-3}$ s. The value of α is _____.

(see the figure above)

Consider a circuit consisting of a capacitor (20 μF), resistor (100 Ω) and two identical diodes as shown in figure. The resistance of diode under forward biasing condition is 10 Ω. The time constant of the circuit is $\alpha \times 10^{-3}$ s. The value of α is _____

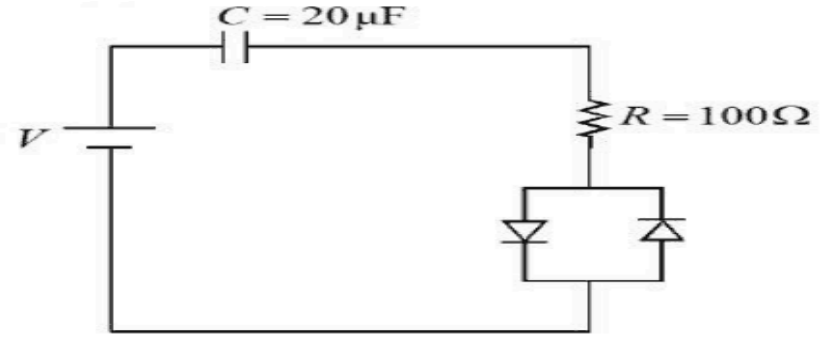

Options :

695278915. 2.2

695278916. 2.0

695278917. 2.1

695278918. 2.4

(A) 2.2

(B) 2.0

(C) 2.1

(D) 2.4

Answer: (A) 2.2 · Official NTA final key

Q7 JEE Main 2026 · 4 Apr · Shift 2 MCQ

From the circuit given below, the capacitance between terminals A and B shown in the circuit is _____ μF.

(take $C_1 = C_2 = C_3 = 1\ \mu$F and $C_4 = 2\ \mu$F.)

(see the figure above)

From the circuit given below, the capacitance between terminals A and B shown in the circuit is _____ μF.
(take $C_1 = C_2 = C_3 = 1$ μF and $C_4 = 2$ μF.)

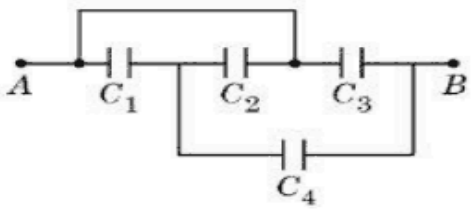

Options :

6952781405. 2

6952781406. 7/2

6952781407. 7/3

6952781408. 5/2

(A) 2
(B) 7/2
(C) 7/3
(D) 5/2

Answer: (A) 2 · Official NTA final key

Q8 JEE Main 2026 · 2 Apr · Shift 1 MCQ

A parallel plate air capacitor has a capacitance C. When it is half filled as show in figure with a dielectric constant $K = 5$, the percentage increase in the capacitance is _____.

(see the figure above)

A parallel plate air capacitor has a capacitance C. When it is half filled as show in figure with a dielectric constant $K=5$, the percentage increase in the capacitance is _____.

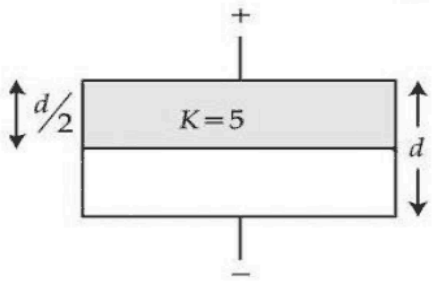

Options :

691121110. 33.34

691121111. 66.67

691121112. 200

691121113. 400

(A) 33.34
(B) 66.67
(C) 200
(D) 400

Answer: (B) 66.67 · Official NTA final key

Q9 JEE Main 2026 · 28 Jan · Shift 2 MCQ

Identify the correct statements :

A. Effective capacitance of a series combination of capacitors is always smaller than the smallest capacitance of the capacitor in the combination.

B. When a dielectric medium is placed between the charged plates of a capacitor, displacement of charges cannot occur due to insulation property of dielectric.

C. Increasing of area of capacitor plate or decreasing of thickness of dielectric is an alternate method to increase the capacitance.

D. For a point charge, concentric spherical shells centered at the location of the charge are equipotential surfaces.

Choose the **correct** answer from the options given below :

(A) C and D Only
(B) A, B and C Only
(C) B and D Only
(D) A, C and D Only

Answer: (D) A, C and D Only · Official NTA final key

Q10 JEE Main 2026 · 24 Jan · Shift 2 MCQ

Three parallel plate capacitors each with area A and separation d are filled with two dielectric (k_1 and k_2) in the following fashion. Which of the following is true? ($k_1 > k_2$)

(see the figure above)

Q.32 Three parallel plate capacitors each with area A and separation d are filled with two dielectric (k_1 and k_2) in the following fashion. Which of the following is true? ($k_1 > k_2$)

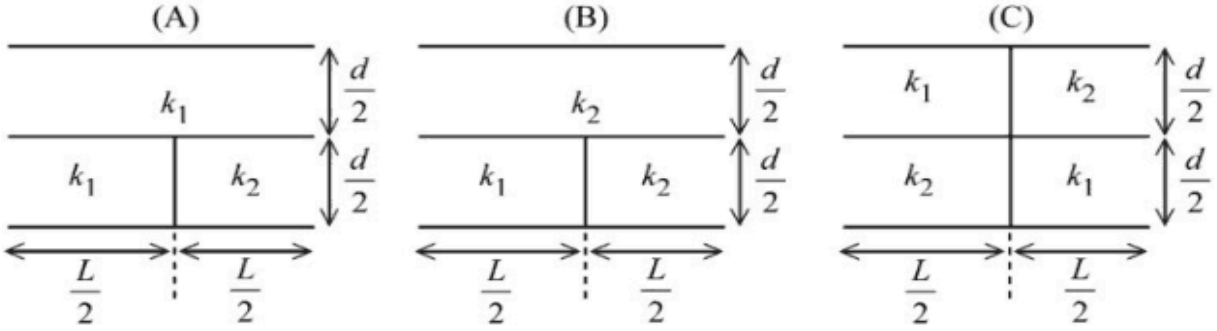

Options
1. $C_B > C_C > C_A$
2. $C_C > C_A > C_B$
3. $C_C > C_B > C_A$
4. $C_A > C_C > C_B$

(A) $C_B > C_C > C_A$
(B) $C_C > C_A > C_B$
(C) $C_C > C_B > C_A$
(D) $C_A > C_C > C_B$

Answer: (D) $C_A > C_C > C_B$ · Official NTA final key

Q11 JEE Main 2026 · 24 Jan · Shift 2 MCQ

The reading of the ammeter (A) in steady state in the following circuit (assuming negligible internal resistance of the ammeter) is _____ A.

(see the figure above)

Q.43 The reading of the ammeter (A) in steady state in the following circuit (assuming negligible internal resistance of the ammeter) is _____A.

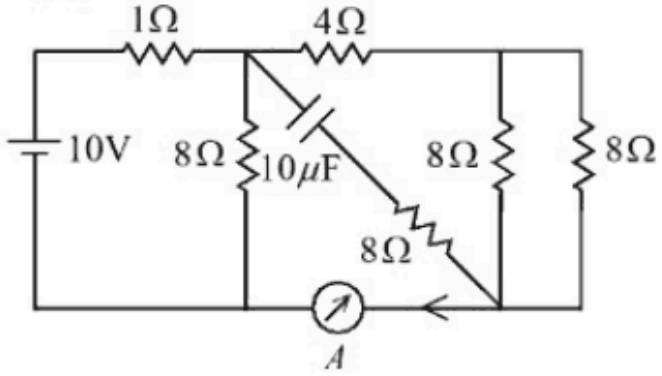

Options 1. 2
2. 1/2
3. 0
4. 1

(A) 2
(B) 1/2
(C) 0
(D) 1

Answer: (D) 1 · Official NTA final key

Q12 JEE Main 2026 · 23 Jan · Shift 1 Numerical

The space between the plates of a parallel plate capacitor of capacitance C (without any dielectric) is now filled with three dielectric slabs of dielectric constants $K_1 = 2$, $K_2 = 3$ and $K_3 = 5$ (as shown in figure). If new capacitance is $\frac{n}{3}C$ then the value of n is _____.

(see the figure above)

Q.48 The space between the plates of a parallel plate capacitor of capacitance C (without any dielectric) is now filled with three dielectric slabs of dielectric constants $K_1 = 2$, $K_2 = 3$ and $K_3 = 5$ (as shown in figure). If new capacitance is $\frac{n}{3}C$ then the value of n is _____.

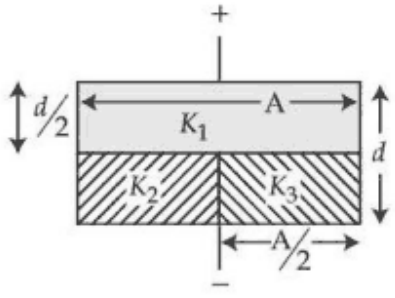

Numerical value type: the answer is a number.

Answer: 8. · Official NTA final key

Q13 JEE Main 2026 · 23 Jan · Shift 2 MCQ

A parallel plate capacitor with plate separation 5 mm is charged by a battery. On introducing a mica sheet of 2 mm and maintaining the connections of the plates with the terminals of the battery, it is found that it draws 25% more charge from the battery. The dielectric constant of mica is _____.

(A) 2.0
(B) 1.0
(C) 1.5
(D) 2.5

Answer: (A) 2.0 · Official NTA final key

Q14 JEE Main 2026 · 22 Jan · Shift 2 Numerical

A capacitor P with capacitance 10×10^{-6} F is fully charged with a potential difference of 6.0 V and disconnected from the battery. The charged capacitor P is connected across another capacitor Q with capacitance 20×10^{-6} F. The charge on capacitor Q when equilibrium is established will be $\alpha \times 10^{-5}$ C (assume capacitor Q does not have any charge initially), the value of α is _____.

Numerical value type: the answer is a number.

Answer: 4. · Official NTA final key

Q15 JEE Main 2026 · 21 Jan · Shift 1 MCQ

A parallel plate capacitor has capacitance C, when there is vacuum within the parallel plates.

A sheet having thickness $\left(\frac{1}{3}\right)^{rd}$ of the separation between the plates and relative permittivity K is introduced between the plates. The new capacitance of the system is :

(A) $\frac{3KC}{2K+1}$
(B) $\frac{CK}{2+K}$
(C) $\frac{3CK^2}{(2K+1)^2}$
(D) $\frac{4KC}{3K-1}$

Answer: (A) $\frac{3KC}{2K+1}$ · Official NTA final key

Q16 JEE Main 2026 · 21 Jan · Shift 2 MCQ

The charge stored by the capacitor C in the given circuit in the steady state is _____ μC.

(see the figure above)

Q.43 The charge stored by the capacitor C in the given circuit in the steady state is _____ μC.

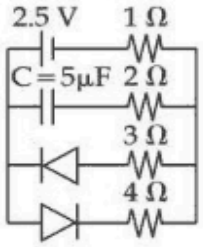

Options

1. 10
2. 7.5
3. 5
4. 12.5

(A) 10
(B) 7.5
(C) 5
(D) 12.5

Answer: (A) 10 · Official NTA final key

Q17 JEE Main 2025 · 8 Apr · Shift 2 Numerical

Space between the plates of a parallel plate capacitor of plate area $4cm^2$ and separation of (d) 1.77 mm, is filled with uniform dielectric materials with dielectric constants (3 and 5) as shown in figure. Another capacitor of capacitance 7.5 pF is connected in parallel with it. The effective capacitance of this combination is _____ pF. (Given $\epsilon_0 = 8.85 \times 10^{-12}$ F/m)

(see the figure above)

24. Space between the plates of a parallel plate capacitor of plate area $4cm^2$ and separation of (d) 1.77 mm, is filled with uniform dielectric materials with dielectric constants (3 and 5) as shown in figure. Another capacitor of capacitance 7.5 pF is connected in parallel with it. The effective capacitance of this combination is _____ pF. (Given $\epsilon_0 = 8.85 \times 10^{-12}\ \mathrm{F/m}$)

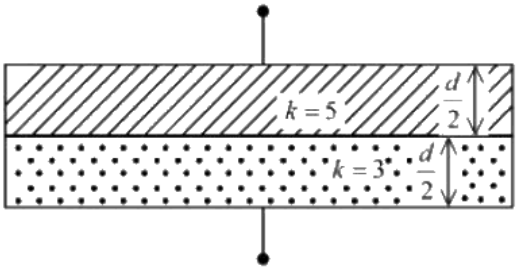

Numerical value type: the answer is a number.

Answer: 15. · Key from source paper

Q18 JEE Main 2025 · 7 Apr · Shift 2 Numerical

A parallel plate capacitor has charge $5 \times 10^{-6} C$. A dielectric slab is inserted between the plates and almost fills the space between the plates. If the induced charge on one face of the slab is $4 \times 10^{-6} C$ then the dielectric constant of the slab is _____ .

Numerical value type: the answer is a number.

Answer: 5. · Key from source paper

Q19 JEE Main 2025 · 4 Apr · Shift 1 Numerical

Four capacitors each of capacitance $16 \mu F$ are connected as shown in the figure. The capacitance between points A and B is : _____ . (in μF).

(see the figure above)

25. Four capacitors each of capacitance 16μF are connected as shown in the figure. The capacitance between points A and B is : _____. (in μF).

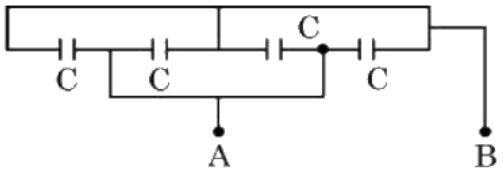

Numerical value type: the answer is a number.

Answer: 64. · Key from source paper

Q20 JEE Main 2025 · 4 Apr · Shift 2 MCQ

Three parallel plate capacitors C_1, C_2 and C_3 each of capacitance $5 \mu F$ are connected as shown in figure. The effective capacitance between points A and B, when the space between the parallel plates of C_1 capacitor is filled with a dielectric medium having dielectric constant of 4, is :

(see the figure above)

8. Three parallel plate capacitors C_1, C_2 and C_3 each of capacitance $5\mu\text{F}$ are connected as shown in figure. The effective capacitance between points A and B, when the space between the parallel plates of C_1 capacitor is filled with a dielectric medium having dielectric constant of 4, is :

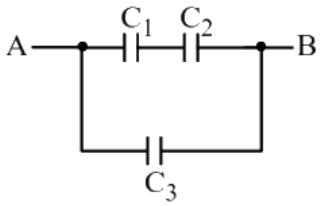

(1) $9\mu\text{F}$ (2) $7.5\mu\text{F}$ (3) $30\mu\text{F}$ (4) $22.5\mu\text{F}$

(A) $9\mu F$
(B) $7.5\mu F$
(C) $30\mu F$
(D) $22.5\mu F$

Answer: (A) $9\mu F$ · Key from source paper

Q21 JEE Main 2025 · 3 Apr · Shift 1 MCQ

A parallel plate capacitor is filled equally(half) with two dielectrics of dielectric constants ϵ_1 and ϵ_2, as shown in figures. The distance between the plates is d and area of each plate is A. If capacitance in first configuration and second configuration are C_1 and C_2 respectively, then $\frac{C_1}{C_2}$ is

(see the figure above)

4. A parallel plate capacitor is filled equally(half) with two dielectrics of dielectric constants ε_1 and ε_2, as shown in figures. The distance between the plates is d and area of each plate is A. If capacitance in first configuration and second configuration are C_1 and C_2 respectively, then $\frac{C_1}{C_2}$ is

First Configuration

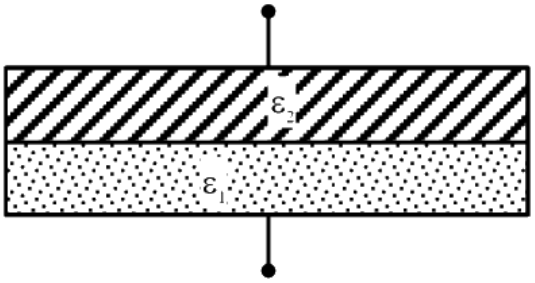

Second Configuration

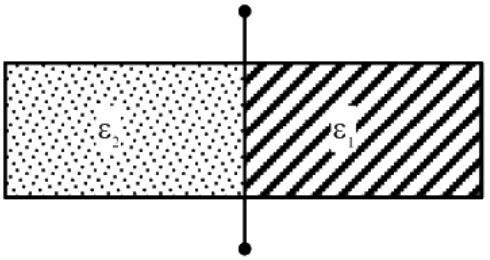

(1) $\frac{\varepsilon_1\varepsilon_2^2}{(\varepsilon_1+\varepsilon_2)^2}$ (2) $\frac{\varepsilon_1\varepsilon_2}{\varepsilon_1+\varepsilon_2}$ (3) $\frac{4\varepsilon_1\varepsilon_2}{(\varepsilon_1+\varepsilon_2)^2}$ (4) $\frac{\varepsilon_0(\varepsilon_1+\varepsilon_2)}{2}$

(A) $\frac{\epsilon_1\epsilon_2^2}{(\epsilon_1+\epsilon_2)^2}$
(B) $\frac{\epsilon_1\epsilon_2}{\epsilon_1+\epsilon_2}$
(C) $\frac{4\epsilon_1\epsilon_2}{(\epsilon_1+\epsilon_2)^2}$
(D) $\frac{\epsilon_0(\epsilon_1+\epsilon_2)}{2}$

Answer: (C) $\frac{4\epsilon_1\epsilon_2}{(\epsilon_1+\epsilon_2)^2}$ · Key from source paper

---

Q22 JEE Main 2025 · 3 Apr · Shift 2 MCQ

Using a battery, a 100 pF capacitor is charged to 60 V and then the battery is removed. After that, a second uncharged capacitor is connected to the first capacitor in parallel. If the final voltage across the second capacitor is 20 V , its capacitance is: (in pF)

(A) 600
(B) 200
(C) 100
(D) 400

Answer: (B) 200 · Key from source paper

Q23 JEE Main 2025 · 2 Apr · Shift 2 MCQ

Given below are two statements : one is labelled as Assertion (A) and the other is labelled as Reason (R). Assertion (A) : Net dipole moment of a polar linear isotropic dielectric substance is not zero even in the absence of an external electric field. Reason (R): In absence of an external electric field, the different permanent dipoles of a polar dielectric substance are oriented in random directions. In the light of the above statements, choose the most appropriate answer from the options given below :

(A) (A) is correct but (R) is not correct
(B) Both (A) and (R) are correct and (R) is the correct explanation of (A)
(C) Both (A) and (R) are correct but (R) is not the correct explanation of (A)
(D) (A) is not correct but (R) is correct

Answer: (D) (A) is not correct but (R) is correct · Key from source paper

---

Q24 JEE Main 2025 · 29 Jan · Shift 2 MCQ

A capacitor, $C_1 = 6\mu$ F is charged to a potential difference of V_0 = 5 V using a 5 V battery. The battery is removed and another capacitor, C_2 = 12μ F is inserted in place of the battery. When the switch 'S' is closed, the charge flows between the capacitors for some time until equilibrium condition is reached. What are the charges (q_1 and q_2) on the capacitors C_1 and C_2 when equilibrium condition is reached.

(see the figure above)

Q38. A capacitor, $C_1 = 6\mu$ F is charged to a potential difference of $V_0 = 5$ V using a 5 V battery. The battery is removed and another capacitor, $C_2 = 12\mu$ F is inserted in place of the battery. When the switch 'S' is closed, the charge flows between the capacitors for some time until equilibrium condition is reached. What are the charges (q_1 and q_2) on the capacitors C_1 and C_2 when equilibrium condition is reached.

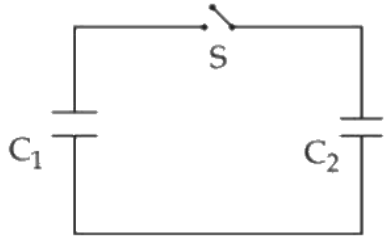

(1) $q_1 = 10\mu C, q_2 = 20\mu C$
(2) $q_1 = 30\mu C, q_2 = 15\mu C$
(3) $q_1 = 20\mu C, q_2 = 10\mu C$
(4) $q_1 = 15\mu C, q_2 = 30\mu C$

(A) $q_1 = 10\mu C, q_2 = 20\mu C$
(B) $q_1 = 30\mu C, q_2 = 15\mu C$
(C) $q_1 = 20\mu C, q_2 = 10\mu C$
(D) $q_1 = 15\mu C, q_2 = 30\mu C$

Answer: (A) $q_1 = 10\mu C, q_2 = 20\mu C$ · Key from source paper

Q25 JEE Main 2025 · 28 Jan · Shift 1 MCQ

Two capacitors C_1 and C_2 are connected in parallel to a battery. Charge-time graph is shown below for the two capacitors. The energy stored with them are U_1 and U_2, respectively. Which of the given statements is true?

(see the figure above)

Q28. Two capacitors C_1 and C_2 are connected in parallel to a battery. Charge-time graph is shown below for the two capacitors. The energy stored with them are U_1 and U_2, respectively. Which of the given statements is true?

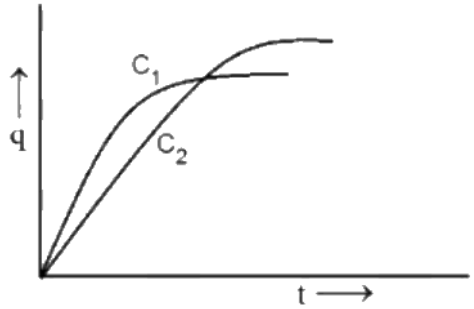

(1) $C_2 > C_1, U_2 < U_1$
(2) $C_1 > C_2, U_1 > U_2$
(3) $C_1 > C_2, U_1 < U_2$
(4) $C_2 > C_1, U_2 > U_1$

(A) $C_2 > C_1, U_2 < U_1$
(B) $C_1 > C_2, U_1 > U_2$
(C) $C_1 > C_2, U_1 < U_2$
(D) $C_2 > C_1, U_2 > U_1$

Answer: (D) $C_2 > C_1, U_2 > U_1$ · Key from source paper

Q26 JEE Main 2025 · 28 Jan · Shift 2 MCQ

A parallel plate capacitor of capacitance 1μ F is charged to a potential difference of 20 V . The distance between plates is 1μ m. The energy density between plates of capacitor is.

(A) $2 \times 10^{-4}\ \mathrm{J/m^3}$
(B) $1.8 \times 10^{5}\ \mathrm{J/m^3}$
(C) $1.8 \times 10^{3}\ \mathrm{J/m^3}$
(D) $2 \times 10^{2}\ \mathrm{J/m^3}$

Answer: (C) $1.8 \times 10^{3}\ \mathrm{J/m^3}$ · Key from source paper

---

Q27 JEE Main 2025 · 24 Jan · Shift 1 MCQ

A parallel plate capacitor was made with two rectangular plates, each with a length of $l = 3$ cm and breath of b = 1 cm. The distance between the plates is 3μ m. Out of the following, which are the ways to increase the capacitance by a factor of 10 ? A. $l = 30$ cm, b = 1 cm, d = 1μ m B. $l = 3$ cm, b = 1 cm, d = 30μ m C. $l = 6$ cm, b = 5 cm, d = 3μ m D. $l = 1$ cm, b = 1 cm, d = 10μ m E. $l = 5$ cm, b = 2 cm, d = 1μ m Choose the correct answer from the options given below:

(A) A only
(B) C only
(C) B and D only
(D) C and E only

Answer: (D) C and E only · Key from source paper

Q28 JEE Main 2025 · 24 Jan · Shift 1 MCQ

Consider a parallel plate capacitor of area A (of each plate) and separation 'd' between the plates. If E is the electric field and ε_0 is the permittivity of free space between the plates, then potential energy stored in the capacitor is

(A) $\varepsilon_0 E^2 A d$
(B) $\frac{1}{2}\varepsilon_0 E^2 A d$
(C) $\frac{1}{4}\varepsilon_0 E^2 A d$
(D) $\frac{3}{4}\varepsilon_0 E^2 A d$

Answer: (B) $\frac{1}{2}\varepsilon_0 E^2 A d$ · Key from source paper

Q29 JEE Main 2025 · 23 Jan · Shift 1 MCQ

Identify the valid statements relevant to the given circuit at the instant when the key is closed.

(see the figure above)

A. There will be no current through resistor R. B. There will be maximum current in the connecting wires. C. Potential difference between the capacitor plates A and B is minimum. D. Charge on the capacitor plates is minimum. Choose the correct answer from the options below:

Q44. Identify the valid statements relevant to the given circuit at the instant when the key is closed.

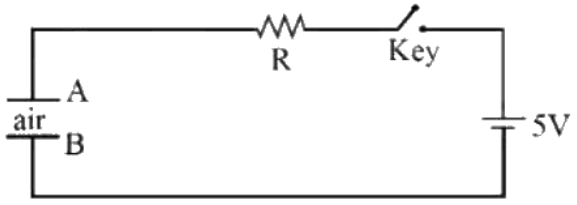

A. There will be no current through resistor R. B. There will be maximum current in the connecting wires. C. Potential difference between the capacitor plates A and B is minimum. D. Charge on the capacitor plates is minimum. Choose the correct answer from the options given below:

(1) A, C Only
(2) A, B, D Only
(3) C, D Only
(4) B, C, D Only

(A) A, C Only
(B) A, B, D Only
(C) C, D Only
(D) B, C, D Only

Answer: (D) B, C, D Only · Key from source paper

Q30 JEE Main 2025 · 23 Jan · Shift 2 Numerical

At steady state the charge on the capacitor, as shown in the circuit below, is _____ μC.

(see the figure above)

Q50. At steady state the charge on the capacitor, as shown in the circuit below, is μC.

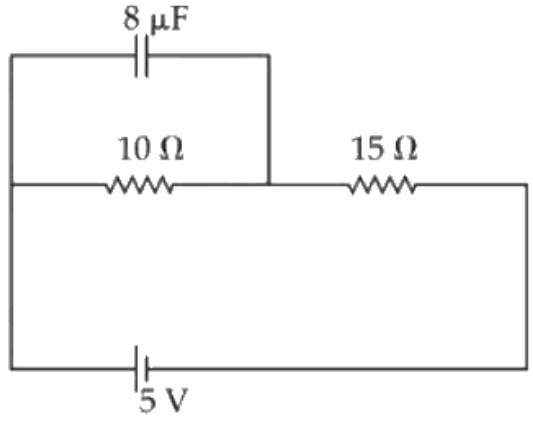

Numerical value type: the answer is a number.

Answer: 16. · Key from source paper

Q31 JEE Main 2025 · 22 Jan · Shift 1 MCQ

A parallel-plate capacitor of capacitance 40μ F is connected to a 100 V power supply. Now the intermediate space between the plates is filled with a dielectric material of dielectric constant K = 2. Due to the introduction of dielectric material, the extra charge and the change in the electrostatic energy in the capacitor, respectively, are

(A) 4 mC and 0.2 J
(B) 8 mC and 2.0 J
(C) 2 mC and 0.4 J
(D) 2 mC and 0.2 J

Answer: (A) 4 mC and 0.2 J · Key from source paper

Q32 JEE Main 2024 · 9 Apr · Shift 1 MCQ

A capacitor is made of a flat plate of area A and a second plate having a stair-like structure as shown in figure. If the area of each stair is $\frac{A}{3}$ and the height is d, the capacitance of the arrangement is :

(see the figure above)

Q11. A capacitor is made of a flat plate of area A and a second plate having a stair-like structure as shown in figure. If the area of each stair is $\frac{A}{3}$ and the height is d, the capacitance of the arrangement is :

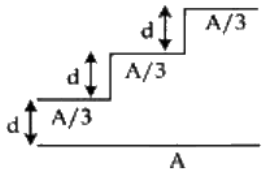

(1) $\frac{13\epsilon_o A}{17d}$
(2) $\frac{11\epsilon_o A}{18\,d}$
(3) $\frac{18\epsilon_o A}{11\,d}$
(4) $\frac{11\epsilon_o A}{20\,d}$

(A) $\frac{13\epsilon_o A}{17d}$
(B) $\frac{11\epsilon_o A}{18\,d}$
(C) $\frac{18\epsilon_o A}{11\,d}$
(D) $\frac{11\epsilon_o A}{20\,d}$

Answer: (B) $\frac{11\epsilon_o A}{18\,d}$ · Key from source paper

Q33 JEE Main 2024 · 8 Apr · Shift 2 MCQ

A capacitor has air as dielectric medium and two conducting plates of area $12\ \text{cm}^2$ and they are 0.6 cm apart. When a slab of dielectric having area $12\ \text{cm}^2$ and 0.6 cm thickness is inserted between the plates, one of the conducting plates has to be moved by 0.2 cm to keep the capacitance same as in previous case. The dielectric constant of the slab is : (Given $\epsilon_0 = 8.834 \times 10^{-12}$ F/m)

(A) 1
(B) 1.33
(C) 0.66
(D) 1.50

Answer: (D) 1.50 · Key from source paper

Q34 JEE Main 2024 · 6 Apr · Shift 2 Numerical

A capacitor of 10μF capacitance whose plates are separated by 10 mm through air and each plate has area 4 cm^2 is now filled equally with two dielectric media of $K_1 = 2$, $K_2 = 3$ respectively as shown in figure. If new force between the plates is 8 N. The supply voltage is _____ $\times 10^{-4}$ V.

(see the figure above)

(we modified language of question to make it correct)

Q25. A capacitor of 10μF capacitance whose plates are separated by 10 mm through air and each plate has area 4 cm^2 is now filled equally with two dielectric media of $K_1 = 2$, $K_2 = 3$ respectively as shown in figure. If new force between the plates is 8 N. The supply voltage is _____ $\times 10^{-4}$ V.

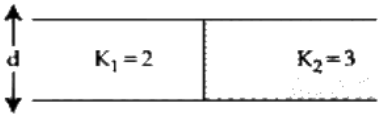

(we modified language of question to make it correct)

Numerical value type: the answer is a number.

Answer: 93. · Key from source paper

Q35 JEE Main 2024 · 5 Apr · Shift 1 Numerical

Three capacitors of capacitances 25μF, 30μF and 45μF are connected in parallel to a supply of 100 V. Energy stored in the above combination is E. When these capacitors are connected in series to the same supply, the stored energy is $\frac{9}{x}$E. The value of x is _____ .

Numerical value type: the answer is a number.

Answer: 86. · Key from source paper

Q36 JEE Main 2024 · 5 Apr · Shift 1 Numerical

The electric field between the two parallel plates of a capacitor of 1.5μF capacitance drops to one third of its initial value in 6.6μs when the plates are connected by a thin wire. The resistance of this wire is _____ Ω. (Given, log 3 = 1.1)

Numerical value type: the answer is a number.

Answer: 4. · Key from source paper

Q37 JEE Main 2024 · 4 Apr · Shift 2 · Numerical

A parallel plate capacitor of capacitance 12.5pF is charged by a battery connected between its plates to potential difference of 12.0 V. The battery is now disconnected and a dielectric slab ($\epsilon_r = 6$) is inserted between the plates. The change in its potential energy after inserting the dielectric slab is _____ 10^{-12} J.

Numerical value type: the answer is a number.

Answer: 750. · Key from source paper

Q38 JEE Main 2024 · 1 Feb · Shift 1 · MCQ

Two identical capacitors have same capacitance C. One of them is charged to the potential V and other to the potential $2V$. The negative ends of both are connected together. When the positive ends are also joined together, the decrease in energy of the combined system is :

(A) $\frac{1}{4}CV^2$
(B) $2CV^2$
(C) $\frac{1}{2}CV^2$
(D) $\frac{3}{4}CV^2$

Answer: (A) $\frac{1}{4}CV^2$ · Key from source paper

Q39 JEE Main 2024 · 1 Feb · Shift 2 · MCQ

A galvanometer G of 2Ω resistance is connected in the given circuit. The ratio of charge stored in C_1 and C_2 is:

(see the figure above)

Q11. A galvanometer G of 2Ω resistance is connected in the given circuit. The ratio of charge stored in C_1 and C_2 is:

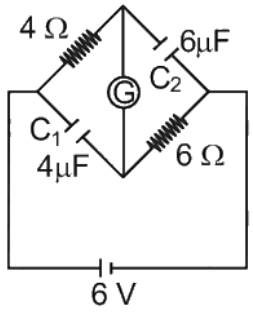

(1) $\frac{2}{3}$
(2) $\frac{3}{2}$
(3) 1
(4) $\frac{1}{2}$

(A) $\frac{2}{3}$
(B) $\frac{3}{2}$
(C) 1
(D) $\frac{1}{2}$

Answer: (D) $\frac{1}{2}$ · Key from source paper

Q40 JEE Main 2024 · 1 Feb · Shift 2 Numerical

In an electrical circuit drawn below the amount of charge stored in the capacitor is _____ μC.

(see the figure above)

Q26. In an electrical circuit drawn below the amount of charge stored in the capacitor is _____ μC.

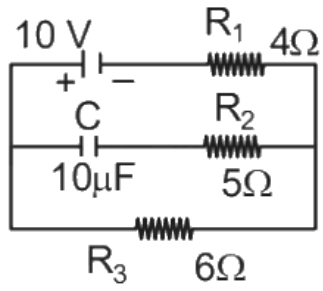

Numerical value type: the answer is a number.

Answer: 60. · Key from source paper

Q41 JEE Main 2024 · 31 Jan · Shift 1 Numerical

A parallel plate capacitor with plate separation 5 mm is charged up by a battery. It is found that on introducing a dielectric sheet of thickness 2 mm, while keeping the battery connections intact, the capacitor draws 25% more charge from the battery than before. The dielectric constant of the sheet is _____.

Numerical value type: the answer is a number.

Answer: 2. · Key from source paper

Q42 JEE Main 2024 · 30 Jan · Shift 1 Numerical

A capacitor of capacitance C and potential V has energy E. It is connected to another capacitor of capacitance $2C$ and potential $2V$. Then the loss of energy is $\frac{x}{3}E$, where x is _____.

Numerical value type: the answer is a number.

Answer: 2. · Key from source paper

Q43 JEE Main 2024 · 29 Jan · Shift 1 Numerical

A 16 Ω wire is bend to form a square loop. A 9 V battery with internal resistance 1 Ω is connected across one of its sides. If a 4 μF capacitor is connected across one of its diagonals, the energy stored by the capacitor will be $\frac{x}{2}$ μJ, where $x =$ _____.

Numerical value type: the answer is a number.

Answer: 81. · Key from source paper

Q44 JEE Main 2024 · 29 Jan · Shift 2 Numerical

In the given figure, the charge stored in 6μF capacitor, when points A and B are joined by a connecting wire is _____ μC.

(see the figure above)

Q28. In the given figure, the charge stored in 6μF capacitor, when points A and B are joined by a connecting wire is _____ μC.

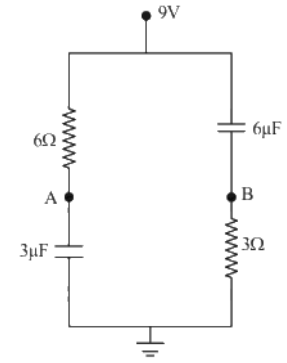

Numerical value type: the answer is a number.

Answer: 36. · Key from source paper

Q45 JEE Main 2024 · 27 Jan · Shift 1 Numerical

The charge accumulated on the capacitor connected in the following circuit is _____ μC.

(Given C = 150 μF)

(see the figure above)

Q26. The charge accumulated on the capacitor connected in the following circuit is _____μC.

(Given C = 150 μF)

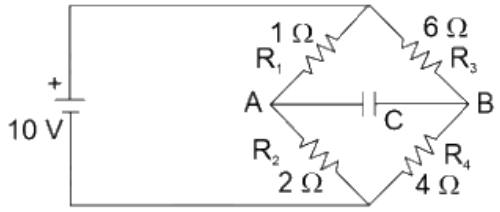

Numerical value type: the answer is a number.

Answer: 400. · Key from source paper

Q46 JEE Main 2023 · 15 Apr · Shift 1 Numerical

In the given figure the total charge stored in the combination of capacitors is 100 μC. The value of 'x' is _____.

(see the figure above)

Q25. In the given figure the total charge stored in the combination of capacitors is 100 μC. The value of 'x' is _____.

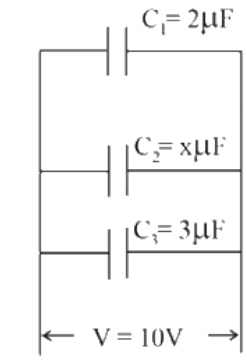

Numerical value type: the answer is a number.

Answer: 5. · Key from source paper

Q47 JEE Main 2023 · 13 Apr · Shift 2 MCQ

In the network shown below, the charge accumulated in the capacitor in steady state will be:

(see the figure above)

Q12. In the network shown below, the charge accumulated in the capacitor in steady state will be:

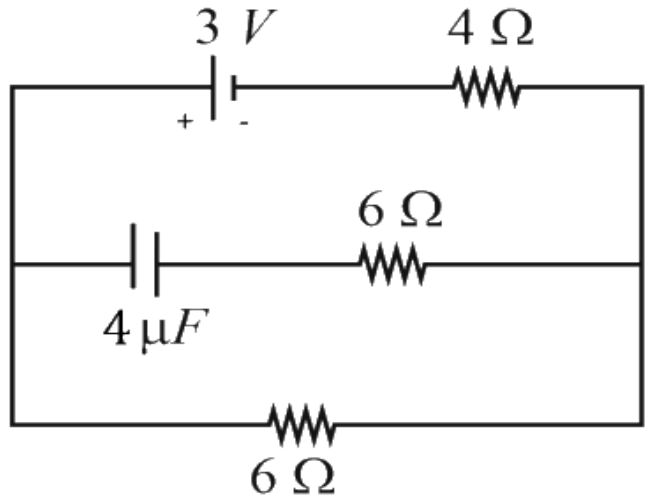

(1) 10.3 μC
(2) 4.8 μC
(3) 12 μC
(4) 7.2μC

(A) 10.3 μC
(B) 4.8 μC
(C) 12 μC
(D) 7.2μC

Answer: (D) 7.2μC · Key from source paper

Q48 JEE Main 2023 · 13 Apr · Shift 2 Numerical

In the circuit shown, the energy stored in the capacitor is n μJ. The value of n is _____.

(see the figure above)

Q26. In the circuit shown, the energy stored in the capacitor is n μJ. The value of n is _____.

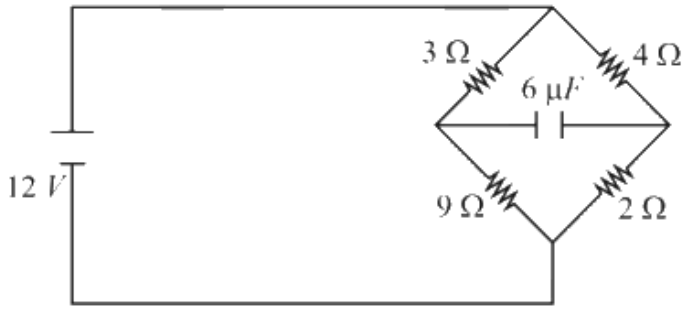

Numerical value type: the answer is a number.

Answer: 75. · Key from source paper

Q49 JEE Main 2023 · 11 Apr · Shift 1 MCQ

A parallel plate capacitor of capacitance 2 F is charged to a potential V. The energy stored in the capacitor is E_1. The capacitor is now connected to another uncharged identical capacitor in parallel combination. The energy stored in the combination is E_2. The ratio $\frac{E_2}{E_1}$ is

(A) $2:1$
(B) $2:3$
(C) $1:2$
(D) $1:4$

Answer: (C) $1:2$ · Key from source paper

Q50 JEE Main 2023 · 11 Apr · Shift 2 Numerical

In the given circuit. $C_1 = 2\mu F$, $C_2 = 0.2\mu F$, $C_3 = 2\mu F$, $C_4 = 4\mu F$, $C_5 = 2\mu F$, $C_6 = 2\mu F$. The charge stored on capacitor C_4 is _____ μC.

(see the figure above)

Q17. In the given circuit. $C_1 = 2\mu F, C_2 = 0.2\mu F, C_3 = 2\mu F, C_4 = 4\mu F, C_5 = 2\mu F, C_6 = 2\mu F$. The charge stored on capacitor C_4 is _____ μC.

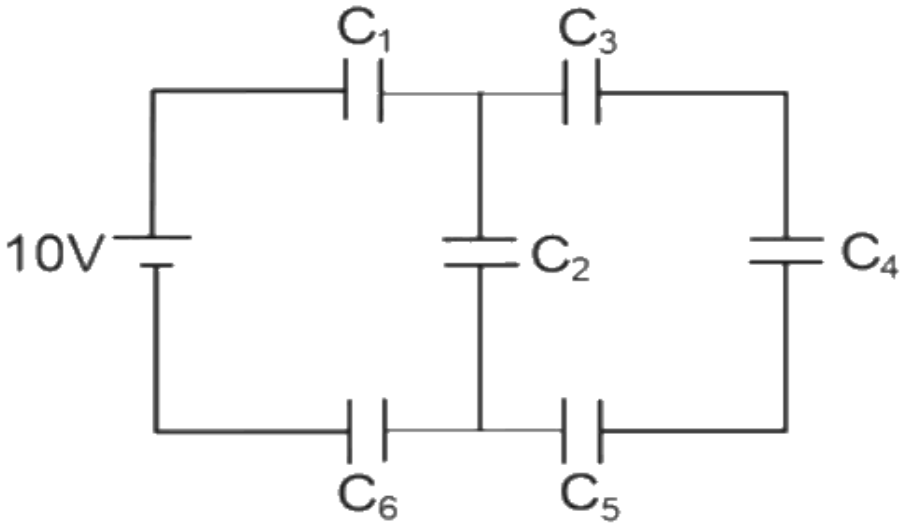

Numerical value type: the answer is a number.

Answer: 4. · Key from source paper

Q51 JEE Main 2023 · 10 Apr · Shift 1 MCQ

The equivalent capacitance of the combination shown is
(see the figure above)

Q11. The equivalent capacitance of the combination shown is

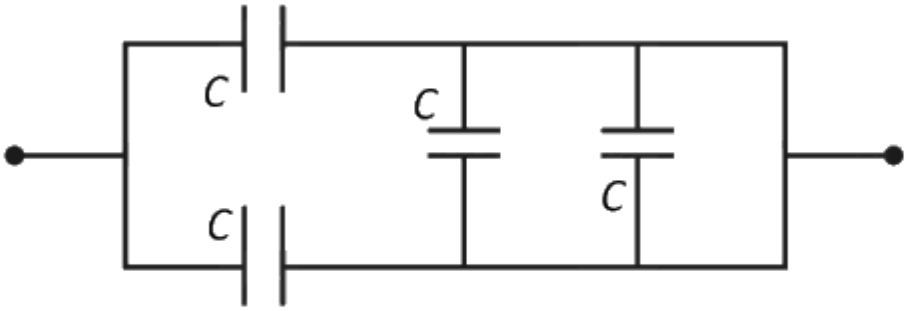

(1) 2 C
(2) $\frac{5}{3}$ C
(3) $\frac{C}{2}$
(4) 4 C

(A) 2 C
(B) $\frac{5}{3}$ C
(C) $\frac{C}{2}$
(D) 4 C

Answer: (A) 2 C · Key from source paper

Q52 JEE Main 2023 · 10 Apr · Shift 2 MCQ

The distance between two plates of a capacitor is d and its capacitance is C_1, when air is the medium between the plates. If a metal sheet of thickness $\frac{2d}{3}$ and of the same area as plate is introduced between the plates, the capacitance of the capacitor becomes C_2. The ratio $\frac{C_2}{C_1}$ is

(A) $3:1$
(B) $2:1$
(C) $4:1$
(D) $1:1$

Answer: (A) $3:1$ · Key from source paper

Q53 JEE Main 2023 · 8 Apr · Shift 1 MCQ

In this figure the resistance of the coil of galvanometer G is $2\ \Omega$. The emf of the cell is 4 V. The ratio of potential difference across C_1 and C_2 is

(see the figure above)

Q18. In this figure the resistance of the coil of galvanometer G is $2\ \Omega$. The emf of the cell is 4 V. The ratio of potential difference across C_1 and C_2 is

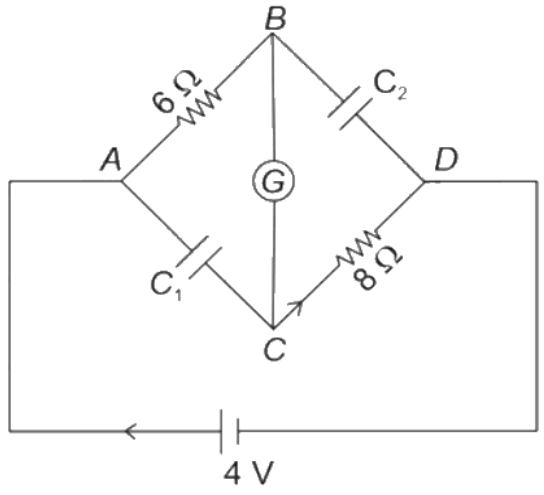

(1) 1
(2) $\frac{4}{5}$
(3) $\frac{5}{4}$
(4) $\frac{3}{4}$

(A) 1
(B) $\frac{4}{5}$
(C) $\frac{5}{4}$
(D) $\frac{3}{4}$

Answer: (B) $\frac{4}{5}$ · Key from source paper

Q54 JEE Main 2023 · 8 Apr · Shift 2 Numerical

A $600\ \mathrm{pF}$ capacitor is charged by $200\ \mathrm{V}$ supply. It is then disconnected from the supply and is connected to another uncharged $600\ \mathrm{pF}$ capacitor. Electrostatic energy lost in the process is _____ $\mu\mathrm{J}$

.

Numerical value type: the answer is a number.

Answer: 6. · Key from source paper

Q55 JEE Main 2023 · 6 Apr · Shift 1 Numerical

A parallel plate capacitor with plate area A and plate separation d is filled with a dielectric material of dielectric constant $K = 4$. The thickness of the dielectric material is x, where $x < d$.

(see the figure above)

Let C_1 and C_2 be the capacitance for the system for $x = \frac{1}{3}d$ and $x = \frac{2d}{3}$, respectively. If $C_1 = 2\ \mu\text{F}$, the value of C_2 is _____ μF.

Q26. A parallel plate capacitor with plate area A and plate separation d is filled with a dielectric material of dielectric constant $K = 4$. The thickness of the dielectric material is x, where $x < d$.

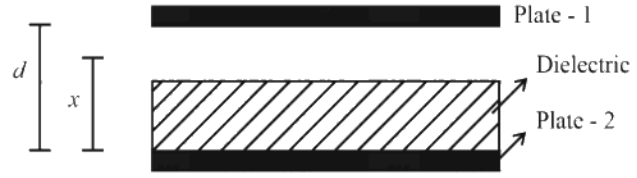

Let C_1 and C_2 be the capacitance of the system for $x = \frac{1}{3}d$ and $x = \frac{2d}{3}$, respectively. If $C_1 = 2$ μF, the value of C_2 is _____ μF.

Numerical value type: the answer is a number.

Answer: 3. · Key from source paper

Q56 JEE Main 2023 · 6 Apr · Shift 2 Numerical

As shown in the figure, two parallel plate capacitors having equal plate area of $200\ \text{cm}^2$ are joined in such a way that $a \neq b$. The equivalent capacitance of the combination is $x\varepsilon_0 F$. The value of x is _____ .

(see the figure above)

Q17. As shown in the figure, two parallel plate capacitors having equal plate area of $200\ \text{cm}^2$ are joined in such a way that $a \neq b$. The equivalent capacitance of the combination is $x\varepsilon_0 F$. The value of x is _____.

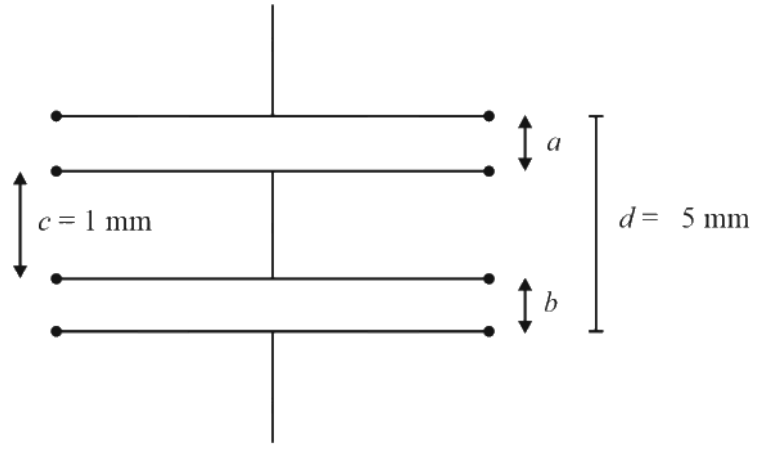

Numerical value type: the answer is a number.

Answer: 5. · Key from source paper

Q57 JEE Main 2023 · 1 Feb · Shift 2 MCQ

Given below are two statements : One is labelled as Assertion A and the other is labelled as **Reason R.**

Assertion A : Two metallic spheres are charged to the same potential. One of them is hollow and another is solid, and both have the same radii. Solid sphere will have lower charge than the hollow one.

Reason R : Capacitance of metallic spheres depend on the radii of spheres.

In the light of the above statements, choose the correct answer from the options given below.

(A) A is false but R is true

(B) Both A and R are true and R is the correct explanation of A

(C) A is true but R is false

(D) Both A and R are true but R is not the correct explanation of A

Answer: (A) A is false but R is true · Key from source paper

Q58 JEE Main 2023 · 31 Jan · Shift 2 Numerical

Two parallel plate capacitors C_1 and C_2 each having capacitance of 10 μF are individually charged by a 100 V D.C. source. Capacitor C_1 is kept connected to the source and a dielectric slab is inserted between its plates. Capacitor C_2 is disconnected from the source and then a dielectric slab is inserted in it. Afterwards the capacitor C_1 is also disconnected from the source and the two capacitors are finally connected in parallel combination. The common potential of the combination will be _____ V. (Assuming Dielectric constant = 10)

Numerical value type: the answer is a number.

Answer: 55. · Key from source paper

Q59 JEE Main 2023 · 31 Jan · Shift 2 Numerical

For the given circuit, in the steady state, $|V_B - V_D|$ = _____ V.

(see the figure above)

Q19. For the given circuit, in the steady state, $|V_B - V_D| =$ _____ V.

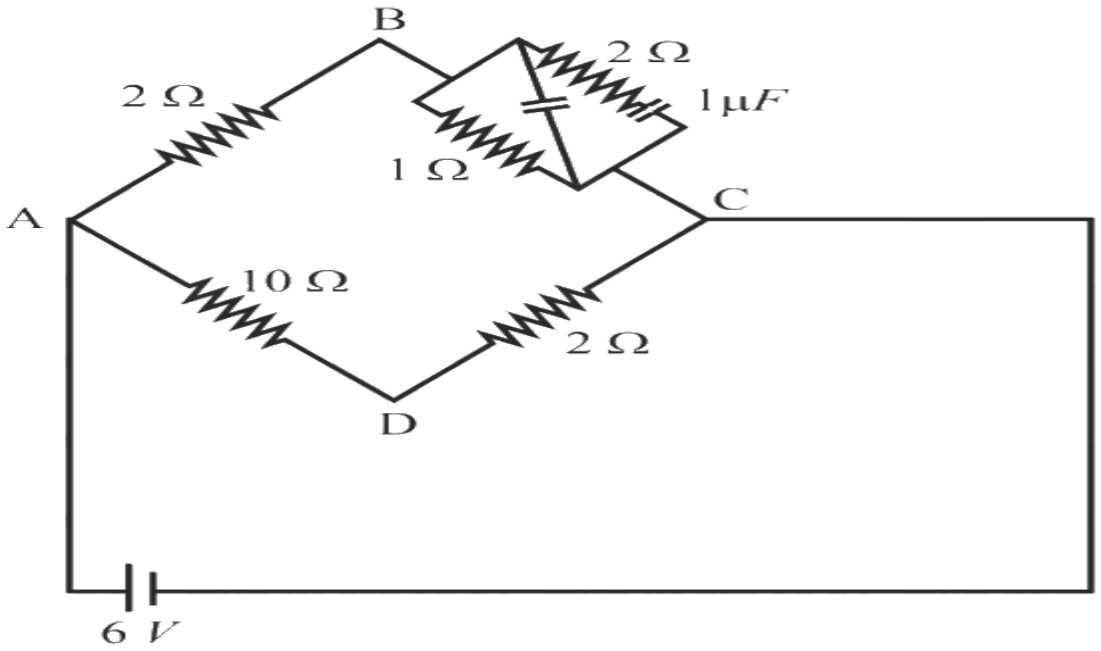

Numerical value type: the answer is a number.

Answer: 1. · Key from source paper

Q60 JEE Main 2023 · 30 Jan · Shift 1 Numerical

A capacitor of capacitance 900 μF is charged by a 100 V battery. The capacitor is disconnected from the battery and connected to another uncharged identical capacitor such that one plate of uncharged capacitor connected to positive plate and another plate of uncharged capacitor connected to negative plate of the charged capacitor. The loss of energy in this process is measured as $x \times 10^{-2}$ J. The value of x is _____.

Numerical value type: the answer is a number.

Answer: 225. · Key from source paper

Q61 JEE Main 2023 · 25 Jan · Shift 1 MCQ

A parallel plate capacitor has plate area $40\ \mathrm{cm}^2$ and plates separation $2\ \mathrm{mm}$. The space between the plates is filled with a dielectric medium of a thickness $1\ \mathrm{mm}$ and dielectric constant 5. The capacitance of the system is:

(A) $24\varepsilon_0$ F

(B) $\frac{3}{10}\varepsilon_0$ F

(C) $\frac{10}{3}\varepsilon_0$ F

(D) $10\varepsilon_0$ F

Answer: (C) $\frac{10}{3}\varepsilon_0$ F · Key from source paper

Q62 JEE Main 2023 · 25 Jan · Shift 2 Numerical

A capacitor has capacitance 5 μF when its parallel plates are separated by air medium of thickness d. A slab of material of dielectric constant 1.5 having area equal to that of plates but thickness $\frac{d}{2}$ is inserted between the plates. Capacitance of the capacitor in the presence of slab will be _____ μF.

Numerical value type: the answer is a number.

Answer: 6. · Key from source paper

Q63 JEE Main 2023 · 24 Jan · Shift 2 Numerical

A parallel plate capacitor with air between the plate has a capacitance of 15 pF. The separation between the plate becomes twice and the space between them is filled with a medium of dielectric constant 3.5. Then the capacitance becomes $\frac{x}{4}$ pF. The value of x is _____.

Numerical value type: the answer is a number.

Answer: 105. · Key from source paper

Q64 JEE Main 2022 · 29 Jul · Shift 2 MCQ

Two identical thin metal plates has charge q_1 and q_2 respectively such that $q_1 > q_2$. The plates were brought close to each other to form a parallel plate capacitor of capacitance C. The potential difference between them is :

(A) $\frac{q_1+q_2}{C}$
(B) $\frac{q_1-q_2}{C}$
(C) $\frac{q_1-q_2}{2C}$
(D) $\frac{2q_1-q_2}{C}$

Answer: (C) $\frac{q_1-q_2}{2C}$ · Key from source paper

Q65 JEE Main 2022 · 28 Jul · Shift 1 MCQ

Two capacitors, each having capacitance $40\mu\text{F}$ are connected in series. The space between one of the capacitors is filled with dielectric material of dielectric constant K such that the equivalence capacitance of the system became $24\mu\text{F}$. The value of K will be :

(A) 1.5
(B) 2.5
(C) 1.2
(D) 3

Answer: (A) 1.5 · Key from source paper

Q66 JEE Main 2022 · 28 Jul · Shift 2 MCQ

A slab of dielectric constant K has the same crosssectional area as the plates of a parallel plate capacitor and thickness $\frac{3}{4}d$, where d is the separation of the plates. The capacitance of the capacitor

when the slab is inserted between the plates will be :
(Given C_0 = capacitance of capacitor with air as medium between plates.)

(A) $\frac{4KC_0}{3+K}$
(B) $\frac{3KC_0}{3+K}$
(C) $\frac{3+K}{4KC_0}$
(D) $\frac{K}{4+K}$

Answer: (A) $\frac{4KC_0}{3+K}$ · Key from source paper

Q67 JEE Main 2022 · 27 Jul · Shift 2 Numerical

As show in the figure, in steady state, the charge stored in the capacitor is _____ $\times 10^{-6}$C.
(see the figure above)

Q26. As show in the figure, in steady state, the charge stored in the capacitor is _____$\times 10^{-6}$C.

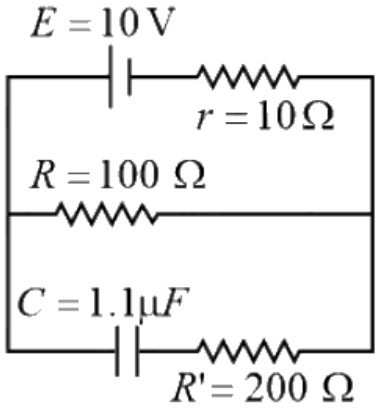

Numerical value type: the answer is a number.

Answer: 10. · Key from source paper

Q68 JEE Main 2022 · 27 Jul · Shift 2 Numerical

A parallel plate capacitor with width 4 cm, length 8 cm and separation between the plates of 4 mm is connected to a battery of 20 V. A dielectric slab of dielectric constant 5 having length 1 cm, width 4 cm and thickness 4 mm is inserted between the plates of parallel plate capacitor. The electrostatic energy of this system will be _____ ϵ_0 J. (Where ϵ_0 is the permittivity of free space)

Numerical value type: the answer is a number.

Answer: 240. · Key from source paper

Q69 JEE Main 2022 · 26 Jul · Shift 1 MCQ

The total charge on the system of capacitance $C_1 = 1\mu\text{F}$, $C_2 = 2\mu\text{F}$, $C_3 = 4\mu\text{F}$ and $C_4 = 3\mu\text{F}$ connected in parallel is
(Assume a battery of 20 V is connected to the combination)

(A) $200\mu C$
(B) 200C
(C) $10\mu C$
(D) 10C

Answer: (A) $200\mu C$ · Key from source paper

Q70 JEE Main 2022 · 26 Jul · Shift 1 Numerical

A composite parallel plate capacitor is made up of two different dielectric materials with different thickness (t_1 and t_2) as shown in figure. The two different dielectric material are separated by a conducting foil F. The voltage of the conducting foil is _____ V.

(see the figure above)

Q25. A composite parallel plate capacitor is made up of two different dielectric materials with different thickness (t_1 and t_2) as shown in figure. The two different dielectric material are separated by a conducting foil F. The voltage of the conducting foil is _____ V.

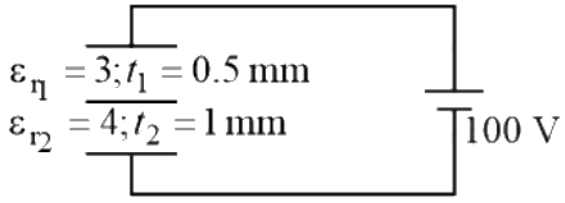

Numerical value type: the answer is a number.

Answer: 60. · Key from source paper

Q71 JEE Main 2022 · 26 Jul · Shift 2 MCQ

A source of potential difference V is connected to the combination of two identical capacitors as shown in the figure. When key K is closed, the total energy stored across the combination is E_1. Now key K is opened and dielectric of dielectric constant 5 is introduced between the plates of the capacitors. The total energy stored across the combination is now E_2. The ratio $\frac{E_1}{E_2}$ will be

(see the figure above)

Q11. A source of potential difference V is connected to the combination of two identical capacitors as shown in the figure. When key K is closed, the total energy stored across the combination is E_1. Now key K is opened and dielectric of dielectric constant 5 is introduced between the plates of the capacitors. The total energy stored across the combination is now E_2. The ratio $\frac{E_1}{E_2}$ will be

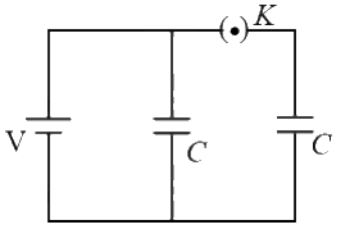

(1) $\frac{1}{10}$
(2) $\frac{2}{5}$
(3) $\frac{5}{13}$
(4) $\frac{5}{26}$

(A) $\frac{1}{10}$
(B) $\frac{2}{5}$
(C) $\frac{5}{13}$
(D) $\frac{5}{26}$

Answer: (C) $\frac{5}{13}$ · Key from source paper

Q72 JEE Main 2022 · 25 Jul · Shift 1 MCQ

A condenser of 2 μF capacitance is charged steadily from 0 to 5 C. Which of the following graph represents correctly the variation of potential difference V across its plates with respect to the charge Q on the condenser?

(see the figure above)

Q10. A condenser of 2 μF capacitance is charged steadily from 0 to 5 C. Which of the following graph represents correctly the variation of potential difference$V$ across its plates with respect to the charge Q on the condenser?

(1) 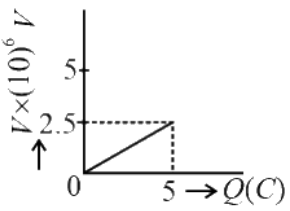

(2) 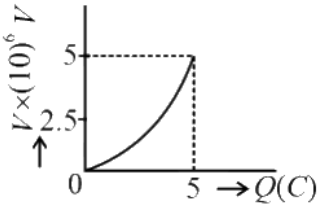

(3) 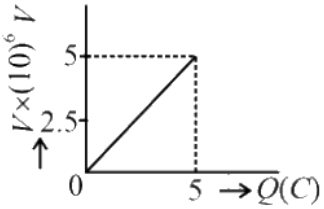

(4) 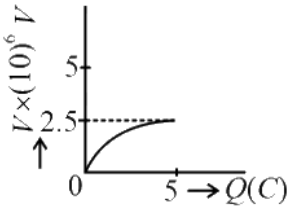

(A) *see figure*
(B) *see figure*
(C) *see figure*
(D) *see figure*

Answer: (A) · Key from source paper

Q73 JEE Main 2022 · 25 Jul · Shift 2 MCQ

Capacitance of an isolated conducting sphere of radius R_1 becomes n times when it is enclosed by a concentric conducting sphere of radius R_2 connected to earth. The ratio of their radii $\left(\frac{R_2}{R_1}\right)$ is:

(A) $\frac{n}{n-1}$
(B) $\frac{2n}{2n+1}$
(C) $\frac{n+1}{n}$
(D) $\frac{2n+1}{n}$

Answer: (A) $\frac{n}{n-1}$ · Key from source paper

Q74 JEE Main 2022 · 25 Jul · Shift 2 · Numerical

Two parallel plate capacitors of capacity C and $3C$ are connected in parallel combination and charged to a potential difference 18 V. The battery is then disconnected and the space between the plates of the capacitor of capacity C is completely filled with a material of dielectric constant 9. The final potential difference across the combination of capacitors will be _____ V.

Numerical value type: the answer is a number.

Answer: 6. · Key from source paper

Q75 JEE Main 2022 · 29 Jun · Shift 1 · MCQ

A parallel plate capacitor filled with a medium of dielectric constant 10, is connected across a battery and is charged. The dielectric slab is replaced by another slab of dielectric constant 15. Then the energy of capacitor will

(A) increase by 50%
(B) decrease by 15%
(C) increase by 25%
(D) increase by 33%

Answer: (A) increase by 50% · Key from source paper

Q76 JEE Main 2022 · 29 Jun · Shift 2 · MCQ

A capacitor is discharging through a resistor R. Consider in time t_1, the energy stored in the capacitor reduces to half of its initial value and in time t_2, the charge stored reduces to one eighth of its initial value. The ratio $\frac{t_1}{t_2}$ will be

(A) $\frac{1}{2}$
(B) $\frac{1}{3}$
(C) $\frac{1}{4}$
(D) $\frac{1}{6}$

Answer: (D) $\frac{1}{6}$ · Key from source paper

Q77 JEE Main 2022 · 28 Jun · Shift 2 · Numerical

A capacitor C_1 of capacitance $5\ \mu\text{F}$ is charged to a potential of $30\ \text{V}$ using a battery. The battery is then removed and the charged capacitor is connected to an uncharged capacitor C_2 of capacitance $10\ \mu\text{F}$ as shown in figure. When the switch is closed charge flows between the capacitors. At equilibrium, the charge on the capacitor C_2 is _____ μC.

(see the figure above)

EdLoop JEE

Q25. A capacitor C_1 of capacitance $5\ \mu\text{F}$ is charged to a potential of $30\ \text{V}$ using a battery. The battery is then removed and the charged capacitor is connected to an uncharged capacitor C_2 of capacitance $10\ \mu\text{F}$ as shown in figure. When the switch is closed charge flows between the capacitors. At equilibrium, the charge on the capacitor C_2 is _____ μC.

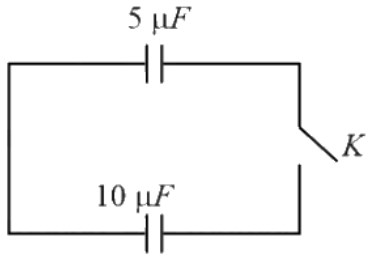

Numerical value type: the answer is a number.

Answer: 100. · Key from source paper

Q78 JEE Main 2022 · 27 Jun · Shift 1 MCQ

A force of $10\ \text{N}$ acts on a charged particle placed between two plates of a charged capacitor. If one plate of capacitor is removed, then the force acting on that particle will be.

(A) $5\ \text{N}$
(B) $10\ \text{N}$
(C) $20\ \text{N}$
(D) Zero

Answer: (A) $5\ \text{N}$ · Key from source paper

Q79 JEE Main 2022 · 27 Jun · Shift 1 Numerical

A capacitor of capacitance $50\ \text{pF}$ is charged by $100\ \text{V}$ source. It is then connected to another uncharged identical capacitor. Electrostatic energy loss in the process is _____ nJ.

Numerical value type: the answer is a number.

Answer: 125. · Key from source paper

Q80 JEE Main 2022 · 27 Jun · Shift 2 Numerical

A parallel plate capacitor is made up of stair like structure with a plate area A of each stair and that is connected with a wire of length b, as shown in the figure. The capacitance of the arrangement is $\frac{x}{15}\frac{\varepsilon_0 A}{b}$. The value of x is _____ .

(see the figure above)

Q25. A parallel plate capacitor is made up of stair like structure with a plate area A of each stair and that is connected with a wire of length b, as shown in the figure. The capacitance of the arrangement is $\frac{x}{15}\frac{\varepsilon_0 A}{b}$, The value of x is _____ .

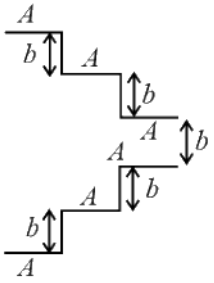

Numerical value type: the answer is a number.

Answer: 23. · Key from source paper

Q81 JEE Main 2022 · 26 Jun · Shift 1 MCQ

Two capacitors having capacitance C_1 and C_2 respectively are connected as shown in figure. Initially, capacitor C_1 is charged to a potential difference V volt by a battery. The battery is then removed and the charged capacitor C_1 is now connected to uncharged capacitor C_2 by closing the switch S. The amount of charge on the capacitor C_2, after equilibrium, is

(see the figure above)

Q10. Two capacitors having capacitance C_1 and C_2 respectively are connected as shown in figure. Initially, capacitor C_1 is charged to a potential difference V volt by a battery. The battery is then removed and the charged capacitor C_1 is now connected to uncharged capacitor C_2 by closing the switch S. The amount of charge on the capacitor C_2, after equilibrium, is

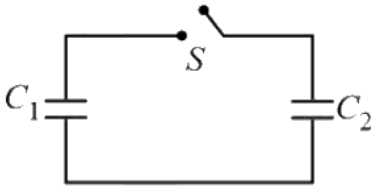

(1) $\frac{C_1C_2}{(C_1+C_2)}V$
(2) $\frac{(C_1+C_2)}{C_1C_2}V$
(3) $(C_1+C_2)V$
(4) $(C_1-C_2)V$

(A) $\frac{C_1C_2}{(C_1+C_2)}V$
(B) $\frac{(C_1+C_2)}{C_1C_2}V$
(C) $(C_1+C_2)V$
(D) $(C_1-C_2)V$

Answer: (A) $\frac{C_1C_2}{(C_1+C_2)}V$ · Key from source paper

Q82 JEE Main 2022 · 26 Jun · Shift 1 MCQ

Given below two statements : One is labelled as Assertion (A) and other is labelled as Reason (R).
Assertion (A): Non-polar materials do not have any permanent dipole moment.

Reason (R): When a non-polar material is placed in an electric field, the centre of the positive charge distribution of it's individual atom or molecule coincides with the centre of the negative charge distribution.

In the light of above statements, choose the most appropriate answer from the options given below.

(A) Both (A) and (R) are correct and (R) is the correct explanation of (A).

(B) Both (A) and (R) are correct and (R) is not the correct explanation of (A).

(C) (A) is correct but (R) is not correct.

(D) (A) is not correct but (R) is correct.

Answer: (C) (A) is correct but (R) is not correct. · Key from source paper

Q83 JEE Main 2022 · 26 Jun · Shift 2 MCQ

The charge on capacitor of capacitance $15\mu\text{F}$ in the figure given below is

(see the figure above)

Q10. The charge on capacitor of capacitance $15\mu\text{F}$ in the figure given below is

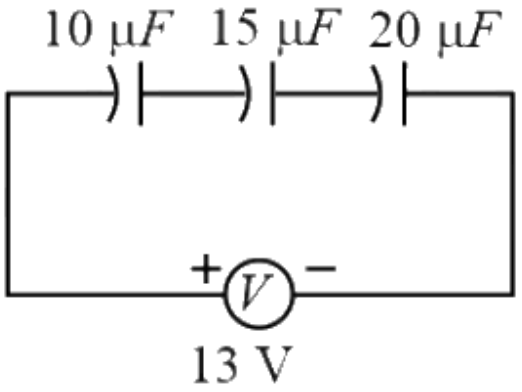

(1) 60 μC (2) 130 μC

(3) 260 μC (4) 585 μC

(A) $60\mu\text{C}$

(B) $130\mu\text{C}$

(C) $260\mu\text{C}$

(D) $585\mu\text{C}$

Answer: (A) $60\mu\text{C}$ · Key from source paper

Q84 JEE Main 2022 · 26 Jun · Shift 2 MCQ

A parallel plate capacitor with plate area A and plate separation $d = 2\ \text{m}$ has a capacitance of $4\mu\text{F}$. The new capacitance of the system if half of the space between them is filled with a dielectric material of dielectric constant $K = 3$ (as shown in figure) will be

(see the figure above)

Q11. A parallel plate capacitor with plate area A and plate separation $d = 2$ m has a capacitance of 4 μF. The new capacitance of the system if half of the space between them is filled with a dielectric material of dielectric constant $K = 3$ (as shown in figure) will be

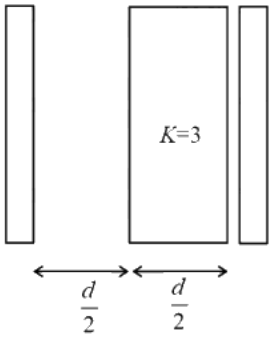

(1) 2 μF
(2) 32 μF
(3) 6 μF
(4) 8 μF

(A) $2\mu F$
(B) $32\mu F$
(C) $6\mu F$
(D) $8\mu F$

Answer: (C) $6\mu F$ · Key from source paper

Q85 JEE Main 2022 · 25 Jun · Shift 1 Numerical

The equivalent capacitance between points A and B in below shown figure will be _____ μF.
(see the figure above)

Q27. The equivalent capacitance between points A and B in below shown figure will be _____ μF.

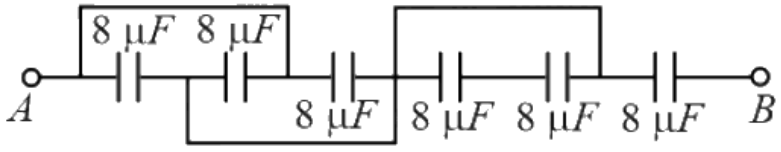

Numerical value type: the answer is a number.

Answer: 6. · Key from source paper

Q86 JEE Main 2022 · 25 Jun · Shift 2 MCQ

Two metallic plates form a parallel plate capacitor. The distance between the plate is 'd'. A metal sheet of thickness $\frac{d}{2}$ and of area equal to area of each plate is introduced between the plates. What will be the ratio of the new capacitance to the original capacitance of the capacitor?
(see the figure above)

Q8. Two metallic plates form a parallel plate capacitor. The distance between the plate is 'd'. A metal sheet of thickness $\frac{d}{2}$ and of area equal to area of each plate is introduced between the plates. What will be the ratio of the

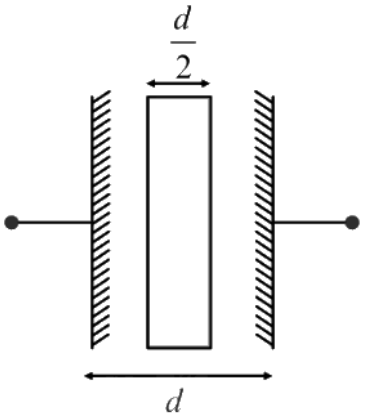

new capacitance to the original capacitance of the capacitor?

(1) 1:2 (2) 2:1

(3) 1:4 (4) 4:1

(A) $1:2$

(B) $2:1$

(C) $1:4$

(D) $4:1$

Answer: (B) $2:1$ · Key from source paper

Q87 JEE Main 2022 · 24 Jun · Shift 1 MCQ

A parallel plate capacitor is formed by two plates each of area $30\pi\ \text{cm}^2$ separated by $1\ \text{mm}$. A material of dielectric strength $3.6 \times 10^7\ \text{V m}^{-1}$ is filled between the plates. If the maximum charge that can be stored on the capacitor without causing any dielectric breakdown is $7 \times 10^{-6}\ \text{C}$, the value of dielectric constant of the material is :

[Use $\frac{1}{4\pi\varepsilon_o} = 9 \times 10^9\ \text{N m}^2\ \text{C}^{-2}$]

(A) 1.66

(B) 1.75

(C) 2.25

(D) 2.33

Answer: (D) 2.33 · Key from source paper

Q88 JEE Main 2022 · 24 Jun · Shift 2 MCQ

If the charge on a capacitor is increased by $2C$, the energy stored in it increases by 44%. The original charge on the capacitor is (in C)

(A) 10
(B) 20
(C) 30
(D) 40

Answer: (A) 10 · Key from source paper

Q89 JEE Main 2021 · 1 Sep · Shift 2 MCQ

A capacitor is connected to a 20 V battery through a resistance of 10Ω. It is found that the potential difference across the capacitor rises to 2 V in 1 μs. The capacitance of the capacitor is _____ μF.
Given $\ln \frac{10}{9} = 0.105$

(A) 0.95
(B) 9.52
(C) 1.85
(D) 0.105

Answer: (A) 0.95 · Key from source paper

Q90 JEE Main 2021 · 31 Aug · Shift 1 Numerical

A capacitor of 50μF is connected in a circuit as shown in figure. The charge on the upper plate of the capacitor is _____ μC.
(see the figure above)

Q26. A capacitor of 50μF is connected in a circuit as shown in figure. The charge on the upper plate of the capacitor is _____ μC.

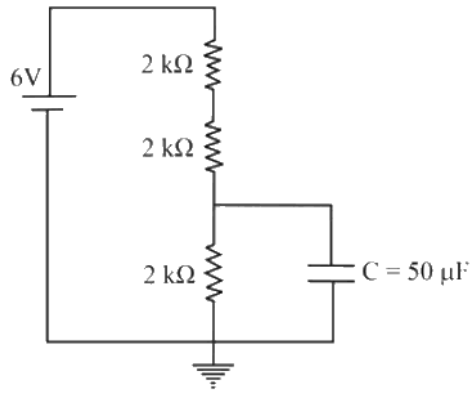

Numerical value type: the answer is a number.

Answer: 100. · Key from source paper

Q91 JEE Main 2021 · 31 Aug · Shift 2 Numerical

A parallel plate capacitor of capacitance 200μF is connected to a battery of 200 V. A dielectric slab of dielectric constant 2 is now inserted into the space between plates of capacitor while the battery remain connected. The change in the electrostatic energy in the capacitor will be _____ J.

Numerical value type: the answer is a number.

Answer: 4. · Key from source paper

Q92 JEE Main 2021 · 27 Aug · Shift 1 MCQ

Calculate the amount of charge on capacitor of $4\ \mu$F. The internal resistance of battery is 1Ω :
(see the figure above)

Q11. Calculate the amount of charge on capacitor of 4 μF. The internal resistance of battery is 1Ω :

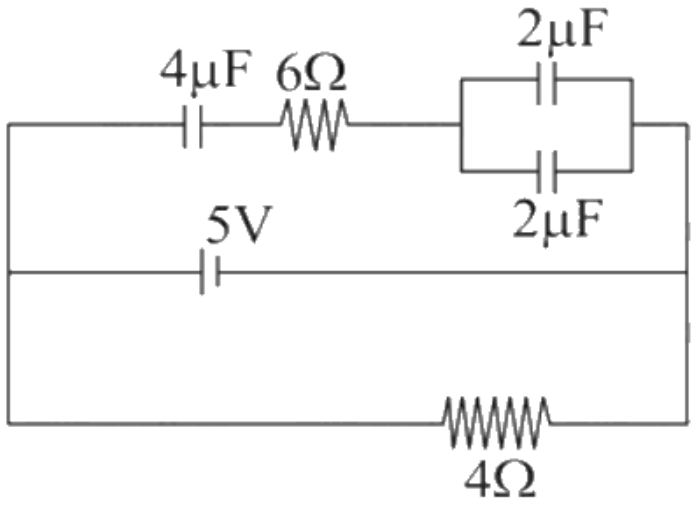

(1) 4 μC
(2) 8 μC
(3) 16 μC
(4) zero

(A) $4\ \mu$C
(B) $8\ \mu$C
(C) $16\ \mu$C
(D) zero

Answer: (B) $8\ \mu$C · Key from source paper

Q93 JEE Main 2021 · 27 Aug · Shift 2 MCQ

Three capacitors $C_1 = 2\ \mu$F, $C_2 = 6\ \mu$F and $C_3 = 12\ \mu$F are connected as shown in the figure. Find the ratio of the charges on capacitors C_1, C_2 and C_3 respectively.
(see the figure above)

Q11. Three capacitors $C_1 = 2\ \mu\text{F},\ C_2 = 6\ \mu\text{F}$ and $C_3 = 12\ \mu\text{F}$ are connected as shown in the figure. Find the ratio of the charges on capacitors $C_1,\ C_2$ and C_3 respectively.

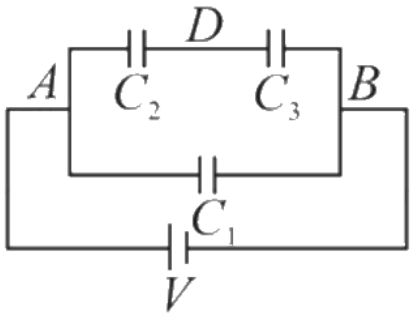

(1) $3 : 4 : 4$
(2) $2 : 3 : 3$
(3) $2 : 1 : 1$
(4) $1 : 2 : 2$

(A) $3 : 4 : 4$
(B) $2 : 3 : 3$
(C) $2 : 1 : 1$
(D) $1 : 2 : 2$

Answer: (D) $1 : 2 : 2$ · Key from source paper

Q94 JEE Main 2021 · 26 Aug · Shift 1 MCQ

The material filled between the plates of a parallel plate capacitor has resistivity $200\ \Omega\,\text{m}$. The value of capacitance of the capacitor is $2\ \text{pF}$. If a potential difference of $40\ \text{V}$ is applied across the plates of the capacitor, then the value of leakage current flowing out of the capacitor is: (given the value of relative permittivity of material is 50)

(A) $0.9\ \text{mA}$
(B) $9.0\ \text{mA}$
(C) $9.0\ \mu\text{A}$
(D) $0.9\ \mu\text{A}$

Answer: (A) $0.9\ \text{mA}$ · Key from source paper

Q95 JEE Main 2021 · 26 Aug · Shift 2 MCQ

A parallel-plate capacitor with plate area A has separation d between the plates. Two dielectric slabs of dielectric constant K_1 and K_2 of same area $\frac{A}{2}$ and thickness $\frac{d}{2}$ are inserted in the space between the plates. The capacitance of the capacitor will be given by :

(see the figure above)

Q12. A parallel-plate capacitor with plate area A has separation d between the plates. Two dielectric slabs of dielectric constant K_1 and K_2 of same area $\frac{A}{2}$ and thickness $\frac{d}{2}$ are inserted in the space between the plates. The capacitance of the capacitor will be given by :

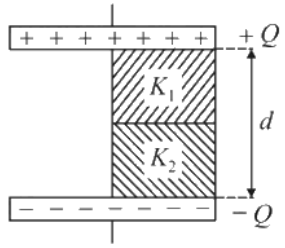

(1) $\frac{\varepsilon_0 A}{d}\left(\frac{1}{2}+\frac{K_1 K_2}{K_1+K_2}\right)$

(2) $\frac{\varepsilon_0 A}{d}\left(\frac{1}{2}+\frac{2(K_1+K_2)}{K_1 K_2}\right)$

(3) $\frac{\varepsilon_0 A}{d}\left(\frac{1}{2}+\frac{K_1+K_2}{K_1 K_2}\right)$

(4) $\frac{\varepsilon_0 A}{d}\left(\frac{1}{2}+\frac{K_1 K_2}{2(K_1+K_2)}\right)$

(A) $\frac{\varepsilon_0 A}{d}\left(\frac{1}{2}+\frac{K_1 K_2}{K_1+K_2}\right)$

(B) $\frac{\varepsilon_0 A}{d}\left(\frac{1}{2}+\frac{2(K_1+K_2)}{K_1 K_2}\right)$

(C) $\frac{\varepsilon_0 A}{d}\left(\frac{1}{2}+\frac{K_1+K_2}{K_1 K_2}\right)$

(D) $\frac{\varepsilon_0 A}{d}\left(\frac{1}{2}+\frac{K_1 K_2}{2(K_1+K_2)}\right)$

Answer: (A) $\frac{\varepsilon_0 A}{d}\left(\frac{1}{2}+\frac{K_1 K_2}{K_1+K_2}\right)$ · Key from source paper

Q96 JEE Main 2021 · 27 Jul · Shift 1 MCQ

see figure

Q13.

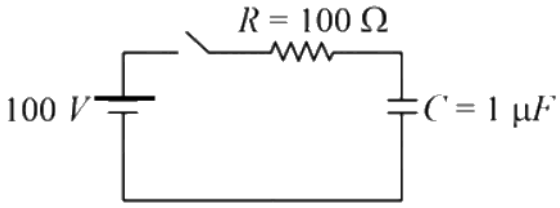

A capacitor of capacitance $C = 1\ \mu\text{F}$ is suddenly connected to a battery of 100 V through a resistance $R = 100\ \Omega$. The time taken for the capacitor to be charged to get 50 V is:

(Take $\ln 2 = 0.69$)

(1) 1.44×10^{-4} s

(2) 3.33×10^{-4} s

(3) 0.69×10^{-4} s

(4) 0.30×10^{-4} s

(A) 1.44×10^{-4} s

(B) 3.33×10^{-4} s

(C) 0.69×10^{-4} s

(D) 0.30×10^{-4} s

Answer: (C) 0.69×10^{-4} s · Key from source paper

Q97 JEE Main 2021 · 27 Jul · Shift 1 MCQ

In the reported figure, a capacitor is formed by placing a compound dielectric between the plates of parallel plate capacitor. The expression for the capacity of the said capacitor will be: (Given the area of the plate $= A$)

(see the figure above)

Q14. In the reported figure, a capacitor is formed by placing a compound dielectric between the plates of parallel plate capacitor. The expression for the capacity of the said capacitor will be: (Given the area of the plate $= A$)

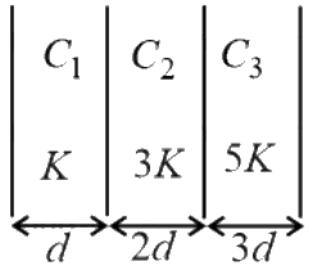

(1) $\frac{15}{34}\frac{K\varepsilon_0 A}{d}$
(2) $\frac{15}{6}\frac{K\varepsilon_0 A}{d}$
(3) $\frac{25}{6}\frac{K\varepsilon_0 A}{d}$
(4) $\frac{9}{6}\frac{K\varepsilon_0 A}{d}$

(A) $\frac{15}{34}\frac{K\varepsilon_0 A}{d}$
(B) $\frac{15}{6}\frac{K\varepsilon_0 A}{d}$
(C) $\frac{25}{6}\frac{K\varepsilon_0 A}{d}$
(D) $\frac{9}{6}\frac{K\varepsilon_0 A}{d}$

Answer: (A) $\frac{15}{34}\frac{K\varepsilon_0 A}{d}$ · Key from source paper

Q98 JEE Main 2021 · 27 Jul · Shift 1 MCQ

Two capacitors of capacities $2C$ and C are joined in parallel and charged up to potential V. The battery is removed and the capacitor of capacity C is filled completely with a medium of dielectric constant K. The potential difference across the capacitors will now be:

(A) $\frac{V}{K+2}$
(B) $\frac{V}{K}$
(C) $\frac{3V}{K+2}$
(D) $\frac{3V}{K}$

Answer: (C) $\frac{3V}{K+2}$ · Key from source paper

Q99 JEE Main 2021 · 27 Jul · Shift 1 Numerical

A radioactive sample has an average life of $30\ \text{ms}$ and is decaying. A capacitor of capacitance $200\ \mu\text{F}$ is first charged and later connected with resistor R. If the ratio of the charge on the capacitor to the activity of the radioactive sample is fixed with respect to time then the value of R should be _____ Ω.

Numerical value type: the answer is a number.

Answer: 150. · Key from source paper

Q100 JEE Main 2021 · 27 Jul · Shift 2 MCQ

A simple pendulum of mass ' m ', length ' l ' and charge '$+q$' suspended in the electric field produced by two conducting parallel plates as shown. The value of deflection of pendulum in equilibrium position will be

(see the figure above)

Q12. A simple pendulum of mass ' m ', length ' l ' and charge '$+q$' suspended in the electric field produced by two conducting parallel plates as shown. The value of deflection of pendulum in equilibrium position will be

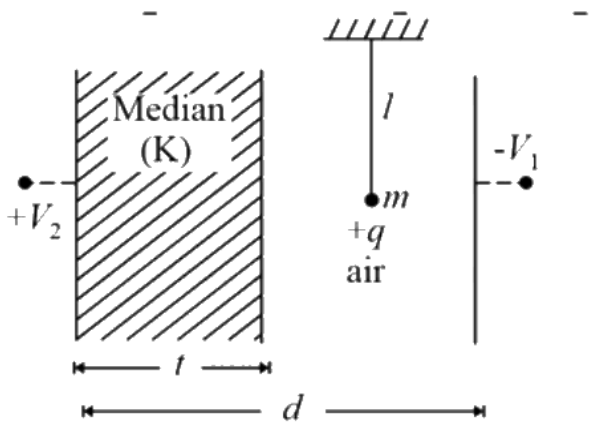

(1) $\tan^{-1}\left[\frac{q}{mg} \times \frac{C_1(V_2-V_1)}{(C_1+C_2)(d-t)}\right]$

(2) $\tan^{-1}\left[\frac{q}{mg} \times \frac{C_2(V_2-V_1)}{(C_1+C_2)(d-t)}\right]$

(3) $\tan^{-1}\left[\frac{q}{mg} \times \frac{C_2(V_1+V_2)}{(C_1+C_2)(d-t)}\right]$

(4) $\tan^{-1}\left[\frac{q}{mg} \times \frac{C_1(V_1+V_2)}{(C_1+C_2)(d-t)}\right]$

(A) $\tan^{-1}\left[\frac{q}{mg} \times \frac{C_1(V_2-V_1)}{(C_1+C_2)(d-t)}\right]$

(B) $\tan^{-1}\left[\frac{q}{mg} \times \frac{C_2(V_2-V_1)}{(C_1+C_2)(d-t)}\right]$

(C) $\tan^{-1}\left[\frac{q}{mg} \times \frac{C_2(V_1+V_2)}{(C_1+C_2)(d-t)}\right]$

(D) $\tan^{-1}\left[\frac{q}{mg} \times \frac{C_1(V_1+V_2)}{(C_1+C_2)(d-t)}\right]$

Options (3) or (4) were accepted. More than one answer was accepted. · Key from source paper

Q101 JEE Main 2021 · 25 Jul · Shift 1 MCQ

A parallel plate capacitor with plate area 'A' and distance of separation 'd' is filled with a dielectric. What is the capacity of the capacitor when permittivity of the dielectric varies as:

$\varepsilon x = \varepsilon_0 + kx$, for $0 < x \leq \frac{d}{2}$

$\varepsilon x = \varepsilon_0 + kd - x$, for $\frac{d}{2} \leq x \leq d$

(A) $\varepsilon_0 + \frac{kd}{2}^{2/kA}$

(B) $\frac{kA}{2\ln\frac{2\varepsilon_0+kd}{2\varepsilon_0}}$

(C) 0

(D) $\frac{kA}{2}\ln\frac{2\varepsilon_0}{2\varepsilon_0-kd}$

Answer: (B) $\frac{kA}{2\ln\frac{2\varepsilon_0+kd}{2\varepsilon_0}}$ · Key from source paper

---

Q102

JEE Main 2021 · 25 Jul · Shift 2 | MCQ

If q_f is the free charge on the capacitor plates and q_b is the bound charge on the dielectric slab of dielectric constant k placed between the capacitor plates, then bound charge q_b can be expressed as :

(A) $q_b = q_f\left(1-\frac{1}{\sqrt{k}}\right)$

(B) $q_b = q_i\left(1-\frac{1}{k}\right)$

(C) $q_b = q_f\left(1+\frac{1}{\sqrt{k}}\right)$

(D) $q_b = q_f\left(1+\frac{1}{k}\right)$

Answer: (B) $q_b = q_i\left(1-\frac{1}{k}\right)$ · Key from source paper

---

Q103

JEE Main 2021 · 18 Mar · Shift 1 | Numerical

A parallel plate capacitor has plate area $100\ \mathrm{m}^2$ and plate separation of $10\ \mathrm{m}$. The space between the plates is filled up to a thickness $5\ \mathrm{m}$ with a material of dielectric constant of 10 . The resultant capacitance of the system is x pF. The value of $\varepsilon_0 = 8.85\times10^{-12}\ \mathrm{F\ m^{-1}}$. The value of x to the nearest integer is _____ .

Numerical value type: the answer is a number.

Answer: 161. · Key from source paper

Q104

JEE Main 2021 · 18 Mar · Shift 1 | Numerical

The circuit shown in the figure consists of a charged capacitor of capacity $3\ \mu\mathrm{F}$ and a charge of $30\ \mu\mathrm{C}$. At time $t = 0$, when the key is closed, the value of current flowing through the $5\ \mathrm{M\Omega}$ resistor is $x\ \mu\mathrm{A}$. The value of x to the nearest integer is

(see the figure above)

Q28. The circuit shown in the figure consists of a charged capacitor of capacity $3\ \mu\mathrm{F}$ and a charge of $30\ \mu\mathrm{C}$. At time $t = 0$, when the key is closed, the value of current flowing through the $5\ \mathrm{M\Omega}$ resistor is $x\ \mu\mathrm{A}$. The value of x to the nearest integer is

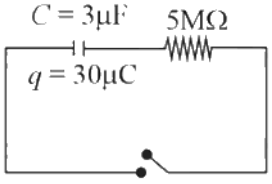

Numerical value type: the answer is a number.

Answer: 2. · Key from source paper

Q105 JEE Main 2021 · 17 Mar · Shift 1 Numerical

Four identical rectangular plates with length, $l = 2$ cm and breadth, $b = \frac{3}{2}$ cm are arranged as shown in figure. The equivalent capacitance between A and C is $\frac{x\varepsilon_0}{d}$. The value of x is _____. (Round off to the Nearest Integer)

(see the figure above)

Q26. Four identical rectangular plates with length, $l = 2$ cm and breadth, $b = \frac{3}{2}$ cm are arranged as shown in figure. The equivalent capacitance between A and C is $\frac{x\varepsilon_0}{d}$. The value of x is _____.
(Round off to the Nearest Integer)

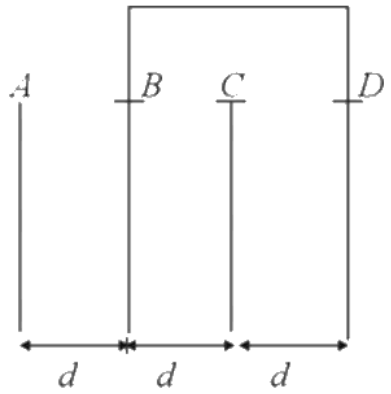

Numerical value type: the answer is a number.

Answer: 2. · Key from source paper

Q106 JEE Main 2021 · 17 Mar · Shift 1 Numerical

A parallel plate capacitor whose capacitance C is 14pF is charged by a battery to a potential difference $V = 12$ V between its plates. The charging battery is now disconnected and a porcelain plate with $k = 7$ is inserted between the plates, then the plate would oscillate back and forth between the plates with a constant mechanical energy of _____ pJ. (Assume no friction)

Numerical value type: the answer is a number.

Answer: 864. · Key from source paper

Q107 JEE Main 2021 · 17 Mar · Shift 2 Numerical

A $2\mu\text{F}$ capacitor C_1 is first charged to a potential difference of 10 V using a battery. Then the battery is removed and the capacitor is connected to an uncharged capacitor C_2 of $8\mu\text{F}$. The charge in C_2 on equilibrium condition is μC. (Round off to the Nearest Integer)

(see the figure above)

Q27. A $2\mu F$ capacitor C_1 is first charged to a potential difference of 10 V using a battery. Then the battery is removed and the capacitor is connected to an uncharged capacitor C_2 of $8\mu F$. The charge in C_2 on equilibrium condition is μC. (Round off to the Nearest Integer)

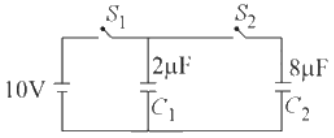

Numerical value type: the answer is a number.

Answer: 16. · Key from source paper

Q108 JEE Main 2021 · 16 Mar · Shift 1 MCQ

For changing the capacitance of a given paralle plate capacitor, a dielectric material of dielectric constant K is used, which has the same area as the plates of the capacitor. The thickness of the dielectric slab is $\frac{3}{4}d$, where d is the separation between the plates of parallel plate capacitor. The new capacitance C' in terms of original capacitance C_0 is given by the following relation :

(A) $C' = \frac{3+K}{4K}C_0$
(B) $C' = \frac{4+K}{3}C_0$
(C) $C' = \frac{4K}{K+3}C_0$
(D) $C' = \frac{4}{3+K}C_0$

Answer: (C) $C' = \frac{4K}{K+3}C_0$ · Key from source paper

Q109 JEE Main 2021 · 16 Mar · Shift 1 MCQ

An RC circuit as shown in the figure is driven by a AC source generating a square wave. The output wave pattern monitored by CRO would look close to :

(see the figure above)

Q15. An RC circuit as shown in the figure is driven by a AC source generating a square wave. The output wave pattern monitored by CRO would look close to :

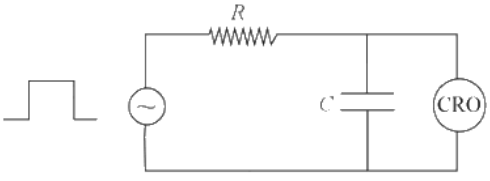

(1) 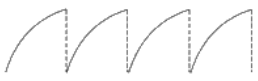
(2) 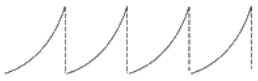
(3) 
(4) 

(A) *see figure*
(B) *see figure*
(C) *see figure*
(D) *see figure*

Answer: (C) · Key from source paper

Q110 JEE Main 2021 · 16 Mar · Shift 2 Numerical

In a parallel plate capacitor set up, the plate area of capacitor is $2\ \mathrm{m}^2$ and the plates are separated by $1\ \mathrm{m}$. If the space between the plates are filled with a dielectric material of thickness $0.5\ \mathrm{m}$ and are $2\ \mathrm{m}^2$ (see figure) the capacitance of the set-up will be ε_0 _____. (Dielectric constant of the material $= 3.2$)
(Round off to the Nearest Integer)
(see the figure above)

Q28. In a parallel plate capacitor set up, the plate area of capacitor is $2\ \mathrm{m}^2$ and the plates are separated by $1\ \mathrm{m}$. If the space between the plates are filled with a dielectric material of thickness $0.5\ \mathrm{m}$ and are $2\ \mathrm{m}^2$ (see figure) the capacitance of the set-up will be ε_0 _____.
(Dielectric constant of the material $= 3.2$)
(Round off to the Nearest Integer)

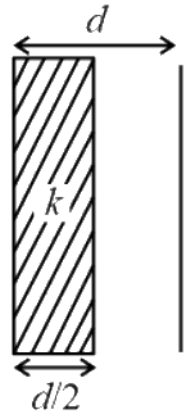

Numerical value type: the answer is a number.

Answer: 3. · Key from source paper

Q111 JEE Main 2021 · 26 Feb · Shift 1 MCQ

Consider the combination of two capacitors C_1 and C_2, with $C_2 > C_1$, when connected in parallel, the equivalent capacitance is 10 times the equivalent capacitance of the same connected in series. Calculate the ratio of capacitors, $\frac{C_2}{C_1}$.

(A) $4+\sqrt{15}$

(B) $2+\sqrt{15}$

(C) 9

(D) $\frac{15}{4}$

Answer: (A) $4+\sqrt{15}$ · Key from source paper

Q112 JEE Main 2021 · 24 Feb · Shift 1 MCQ

Two equal capacitors are first connected in series and then in parallel. The ratio of the equivalent capacities in the two cases will be:

(A) $1:2$

(B) $1:4$

(C) $4:1$

(D) $2:1$

Answer: (B) $1:4$ · Key from source paper

Q113 JEE Main 2020 · 6 Sep · Shift 1 MCQ

For the given input voltage waveform $V_{in}(t)$, the output voltage waveform $V_0(t)$, across the capacitor is correctly depicted by :

(see the figure above)

Q11. For the given input voltage waveform $V_{in}(t)$, the output voltage waveform $V_0(t)$, across the capacitor is correctly depicted by :

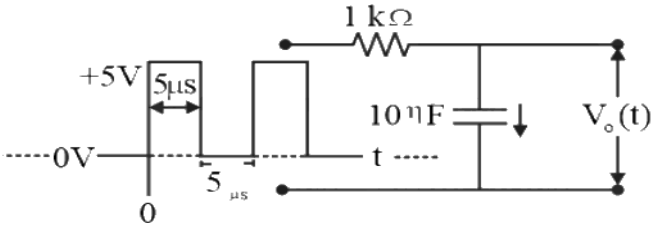

(1)
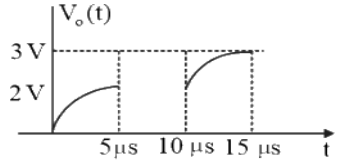

(2)
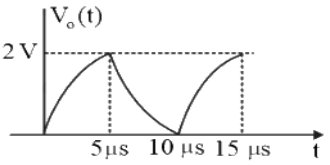

(3)
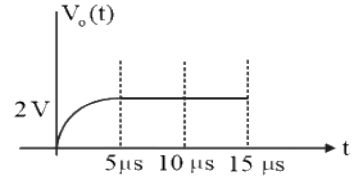

(4)
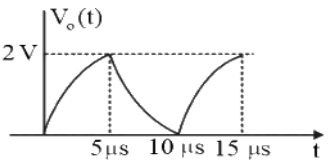

(A) *see figure*
(B) *see figure*
(C) *see figure*
(D) *see figure*

Answer: (A) · Key from source paper

Q114 JEE Main 2020 · 5 Sep · Shift 1 MCQ

Two capacitors of capacitances C and $2C$ are charged to potential differences V and $2V$, respectively. These are then connected in parallel in such a manner that the positive terminal of one is connected to the negative terminal of the other. The final energy of this configuration is :

(A) $\frac{25}{6}CV^2$
(B) $\frac{3}{2}CV^2$
(C) zero
(D) $\frac{9}{2}CV^2$

Answer: (B) $\frac{3}{2}CV^2$ · Key from source paper

Q115 JEE Main 2020 · 5 Sep · Shift 2 MCQ

In the circuit shown, charge on the $5\mu F$ capacitor is :
(see the figure above)

Q11. In the circuit shown, charge on the $5\mu F$ capacitor is :

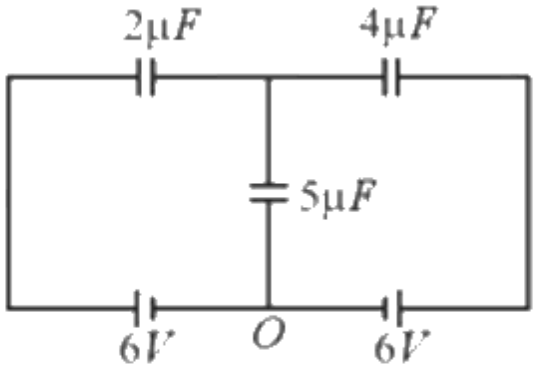

(1) $18.00\mu C$ (2) $10.90\mu C$
(3) $16.36\mu C$ (4) $5.45\mu C$

(A) $18.00\mu C$
(B) $10.90\mu C$
(C) $16.36\mu C$
(D) $5.45\mu C$

Answer: (C) $16.36\mu C$ · Checked by our team

Q116 JEE Main 2020 · 5 Sep · Shift 2 MCQ

A parallel plate capacitor has plate of length l, width w and separation of plates is d. It is connected to a battery of emf V. A dielectric slab of the same thickness d and dielectric constant $K = 4$ is being inserted between the plates of the capacitor. At what length of the slab inside plates, will the energy stored in the capacitor be two times the initial energy stored?

(A) $\frac{2l}{3}$
(B) $\frac{l}{3}$
(C) $\frac{l}{4}$
(D) $\frac{l}{2}$

Answer: (B) $\frac{l}{3}$ · Key from source paper

Q117 JEE Main 2020 · 4 Sep · Shift 2 MCQ

A capacitor C is fully charged with voltage V_0. After disconnecting the voltage source, it is connected in parallel with another uncharged capacitor of capacitance $\frac{C}{2}$. The energy loss in the process after the charge is distributed between the two capacitors is :

(A) $\frac{1}{2}CV_0^2$
(B) $\frac{1}{3}CV_0^2$
(C) $\frac{1}{4}CV_0^2$
(D) $\frac{1}{6}CV_0^2$

Answer: (D) $\frac{1}{6}CV_0^2$ · Key from source paper

Q118 JEE Main 2020 · 3 Sep · Shift 1 MCQ

In the circuit shown in the figure, the total charge is $750\ \mu C$ and the voltage across capacitor C_2 is 20 V. Then the charge on capacitor C_2 is :

(see the figure above)

Q9. In the circuit shown in the figure, the total charge is $750\ \mu C$ and the voltage across capacitor C_2 is 20 V. Then the charge on capacitor C_2 is :

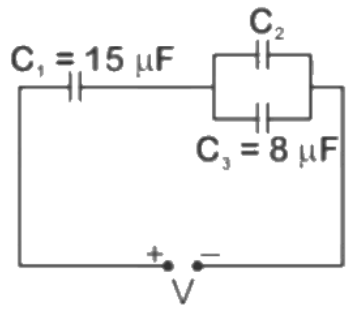

(1) $450\ \mu C$
(2) $590\ \mu C$
(3) $160\ \mu C$
(4) $650\ \mu C$

(A) $450\ \mu C$
(B) $590\ \mu C$
(C) $160\ \mu C$
(D) $650\ \mu C$

Answer: (B) $590\ \mu C$ · Key from source paper

Q119 JEE Main 2020 · 2 Sep · Shift 1 Numerical

A $5\ \mu\text{F}$ capacitor is charged fully by a $220\ \text{V}$ supply. It is then disconnected from the supply and is connected in series to another uncharged $2.5\ \mu\text{F}$ capacitor. If the energy change during the charge redistribution is $\frac{\text{X}}{100}\ \text{J}$ then value of X to the nearest integer is :

Numerical value type: the answer is a number.

Answer: 4. · Key from source paper

Q120 JEE Main 2020 · 2 Sep · Shift 2 MCQ

A $10\ \mu\text{F}$ capacitor is fully charged to a potential difference of $50\ \text{V}$ After removing the source voltage it is connected to an uncharged capacitor in parallel. Now the potential difference across them becomes $20\ \text{V}$. The capacitance of the second capacitor is :

(A) $15\ \mu\text{F}$
(B) $30\ \mu\text{F}$
(C) $20\ \mu\text{F}$
(D) $10\ \mu\text{F}$

Answer: (A) $15\ \mu\text{F}$ · Key from source paper

Q121 JEE Main 2020 · 2 Sep · Shift 2 Numerical

An ideal cell of emf 10V is connected in circuit shown in figure. Each resistance is 2Ω. The potential difference (in V) across the capacitor when it is fully charged is _____

(see the figure above)

Q24. An ideal cell of emf 10V is connected in circuit shown in figure. Each resistance is 2Ω. The potential difference (in V) across the capacitor when it is fully charged is _____

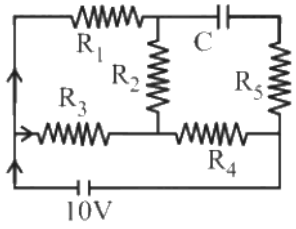

Numerical value type: the answer is a number.

Answer: 8. · Key from source paper

Q122 JEE Main 2020 · 9 Jan · Shift 2 MCQ

Two identical capacitors A and B, charged to the same potential $5V$ are connected in two different circuits as shown below at time $t = 0$. If the charge on capacitors A and B at time $t = CR$ is Q_A and Q_B respectively, then (Here e is the base of natural logarithm)

(see the figure above)

Q15. Two identical capacitors A and B, charged to the same potential $5V$ are connected in two different circuits as shown below at time $t = 0$. If the charge on capacitors A and B at time $t = CR$ is Q_A and Q_B respectively, then (Here e is the base of natural logarithm)

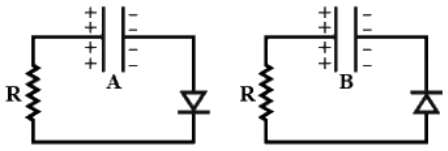

(1) $Q_A = \frac{VC}{e}, Q_B = \frac{CV}{2}$
(2) $Q_A = VC, Q_B = CV$
(3) $Q_A = VC, Q_B = \frac{VC}{e}$
(4) $Q_A = \frac{CV}{2}, Q_B = \frac{VC}{e}$

(A) $Q_A = \frac{VC}{e}, Q_B = \frac{CV}{2}$
(B) $Q_A = VC, Q_B = CV$
(C) $Q_A = VC, Q_B = \frac{VC}{e}$
(D) $Q_A = \frac{CV}{2}, Q_B = \frac{VC}{e}$

Answer: (C) $Q_A = VC, Q_B = \frac{VC}{e}$ · Key from source paper

Q123 JEE Main 2020 · 8 Jan · Shift 1 MCQ

Effective capacitance of parallel combination of two capacitors C_1 and C_2 is $10\mu\text{F}$. When these capacitors are individually connected to a voltage source of 1V, the energy stored in the capacitor C_2 is 4 times that of C_1. If these capacitors are connected in series, their effective capacitance will be:

(A) $4.2\mu\text{F}$
(B) $3.2\mu\text{F}$
(C) $1.6\mu\text{F}$
(D) $8.4\mu\text{F}$

Answer: (C) $1.6\mu\text{F}$ · Key from source paper

Q124 JEE Main 2020 · 8 Jan · Shift 2 MCQ

A capacitor is made of two square plates each of side ' a ' making a very small angle α between them, as shown in figure. The capacitance will be close to:

(see the figure above)

Q12. A capacitor is made of two square plates each of side ' a ' making a very small angle α between them, as shown in figure. The capacitance will be close to:

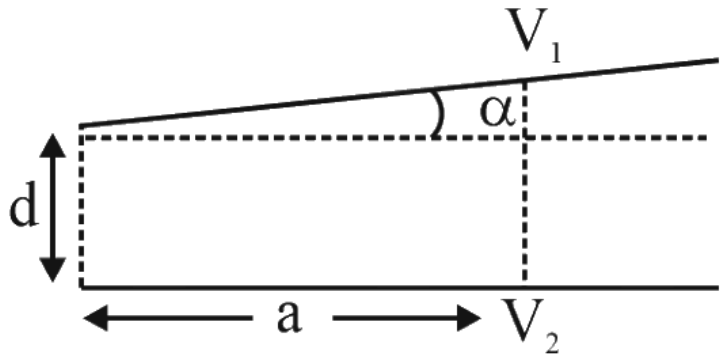

(1) $\frac{\epsilon_0 a^2}{d}\left(1-\frac{\alpha a}{2d}\right)$
(2) $\frac{\epsilon_0 a^2}{d}\left(1-\frac{\alpha a}{4d}\right)$
(3) $\frac{\epsilon_0 a^2}{d}\left(1+\frac{\alpha a}{d}\right)$
(4) $\frac{\epsilon_0 a^2}{d}\left(1-\frac{3\alpha a}{2d}\right)$

(A) $\frac{\epsilon_0 a^2}{d}\left(1-\frac{\alpha a}{2d}\right)$
(B) $\frac{\epsilon_0 a^2}{d}\left(1-\frac{\alpha a}{4d}\right)$
(C) $\frac{\epsilon_0 a^2}{d}\left(1+\frac{\alpha a}{d}\right)$
(D) $\frac{\epsilon_0 a^2}{d}\left(1-\frac{3\alpha a}{2d}\right)$

Answer: (A) $\frac{\epsilon_0 a^2}{d}\left(1-\frac{\alpha a}{2d}\right)$ · Key from source paper

Q125 JEE Main 2020 · 7 Jan · Shift 1 MCQ

see figure

Q10.

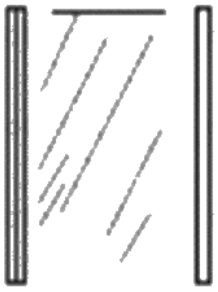

A parallel plate capacitor has plates of area A separated by distance d between them. It is filled with a dielectric which has a dielectric constant that varies as $K(x)=K_0(1+\alpha x)$ where x is the distance measured from one of the plates. If $(\alpha d)<<1$, the total capacitance of the system is best given by the expression:

(1) $\frac{AK_0\varepsilon_0}{d}\left(1+\frac{\alpha d}{2}\right)$
(2) $\frac{AK_0\varepsilon_0}{d}\left[1+\left(\frac{\alpha d}{2}\right)^2\right]$
(3) $\frac{AK_0\varepsilon_0}{d}\left(1+\frac{\alpha^2 d^2}{2}\right)$
(4) $\frac{AK_0\varepsilon_0}{d}(1+\alpha d)$

(A) $\frac{AK_0\varepsilon_0}{d}\left(1+\frac{\alpha d}{2}\right)$

(B) $\frac{AK_0\varepsilon_0}{d}\left[1+\left(\frac{\alpha d}{2}\right)^2\right]$

(C) $\frac{AK_0\varepsilon_0}{d}\left(1+\frac{\alpha^2 d^2}{2}\right)$

(D) $\frac{AK_0\varepsilon_0}{d}(1+\alpha d)$

Answer: (A) $\frac{AK_0\varepsilon_0}{d}\left(1+\frac{\alpha d}{2}\right)$ · Key from source paper

Q126 JEE Main 2020 · 7 Jan · Shift 2 Numerical

A $60\mathrm{pF}$ capacitor is fully charged by a $20\mathrm{V}$ supply. It is then disconnected from the supply and is connected to another uncharged $60\mathrm{pF}$ capacitor in parallel. The electrostatic energy that is lost in this process by the time the charge is redistributed between them is (in nJ) _____

Numerical value type: the answer is a number.

Answer: 6. · Key from source paper

Q127 JEE Main 2019 · 12 Apr · Shift 1 MCQ

Two identical parallel plate capacitors, of capacitance C each, have plates of area A, separated by a distance d . The space between the plates of the two capacitors, is filled with three dielectrics, of equal thickness and dielectric constants K_1, K_2 and K_3 . The first capaciitor is filled as shown in figure I, and the second one is filled as shown in figure II .

If these two modified capacitors are charged by the same potential V , the ratio of the energy stored in the two, would be (E_1 refers to capacitor I and E_2 to capacitor (II)):

(see the figure above)

Q16. Two identical parallel plate capacitors, of capacitance C each, have plates of area A, separated by a distance d . The space between the plates of the two capacitors, is filled with three dielectrics, of equal thickness and dielectric constants K_1, K_2 and K_3 . The first capaciitor is filled as shown in figure I, and the second one is filled as shown in figure II .

If these two modified capacitors are charged by the same potential V , the ratio of the energy stored in the two, would be $\left(\mathrm{E}_1\right.$ refers to capacitor I and E_2 to capacitor $\left.(\mathrm{II})\right)$:

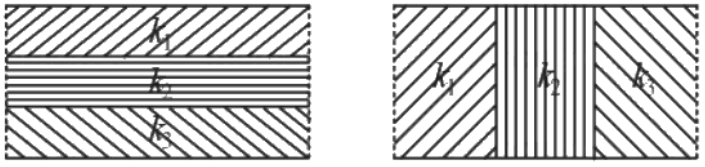

(I) (II)

(1) $\frac{\mathrm{E}_1}{\mathrm{E}_2}=\frac{9\mathrm{K}_1\mathrm{K}_2\mathrm{K}_3}{\left(\mathrm{K}_1\mathrm{K}_2\mathrm{K}_3\right)\left(\mathrm{K}_2\mathrm{K}_3+\mathrm{K}_3\mathrm{K}_1\mathrm{K}_1+\mathrm{K}_1\mathrm{K}_2\right)}$

(2) $\frac{\mathrm{E}_1}{\mathrm{E}_2}=\frac{\left(\mathrm{K}_1\mathrm{K}_2\mathrm{K}_3\right)\left(\mathrm{K}_2\mathrm{K}_3+\mathrm{K}_3\mathrm{K}_1\mathrm{K}_1+\mathrm{K}_1\mathrm{K}_2\right)}{\mathrm{K}_1\mathrm{K}_2\mathrm{K}_3}$

(3) $\frac{\mathrm{E}_1}{\mathrm{E}_2}=\frac{\left(\mathrm{K}_1\mathrm{K}_2\mathrm{K}_3\right)\left(\mathrm{K}_2\mathrm{K}_3+\mathrm{K}_3\mathrm{K}_1\mathrm{K}_1+\mathrm{K}_1\mathrm{K}_2\right)}{9\mathrm{K}_1\mathrm{K}_2\mathrm{K}_3}$

(4) $\frac{\mathrm{E}_1}{\mathrm{E}_2}=\frac{\frac{\mathrm{K}_1\mathrm{K}_2\mathrm{K}_3}{9}}{\left(\mathrm{K}_1\mathrm{K}_2\mathrm{K}_3\right)\left(\mathrm{K}_2\mathrm{K}_3+\mathrm{K}_3\mathrm{K}_1\mathrm{K}_1+\mathrm{K}_1\mathrm{K}_2\right)}$

(A) $\frac{E_1}{E_2} = \frac{9K_1K_2K_3}{(K_1K_2K_3)\,(K_2K_3+K_3K_1K_1+K_1K_2)}$

(B) $\frac{E_1}{E_2} = \frac{(K_1K_2K_3)\,(K_2K_3+K_3K_1K_1+K_1K_2)}{K_1K_2K_3}$

(C) $\frac{E_1}{E_2} = \frac{(K_1K_2K_3)\,(K_2K_3+K_3K_1K_1+K_1K_2)}{9K_1K_2K_3}$

(D) $\frac{E_1}{E_2} = \frac{K_1K_2K_3}{(K_1K_2K_3)\,(K_2K_3+K_3K_1K_1+K_1K_2)}$

Answer: (A) $\frac{E_1}{E_2} = \frac{9K_1K_2K_3}{(K_1K_2K_3)\,(K_2K_3+K_3K_1K_1+K_1K_2)}$ · Key from source paper

Q128 JEE Main 2019 · 12 Apr · Shift 2 MCQ

In the given circuit, the charge on $4\ \mu F$ capacitor will be:

(see the figure above)

Q17. In the given circuit, the charge on 4 μF capacitor will be:

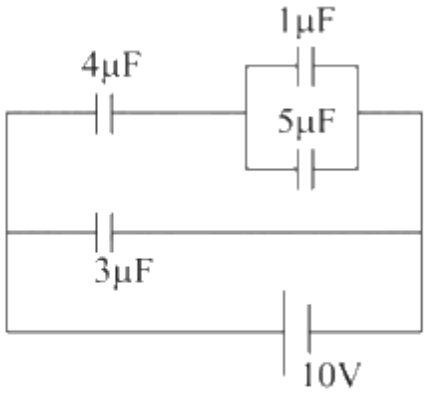

(1) 9.6 μC (2) 5.4 μC

(3) 24 μC (4) 13.4 μC

(A) $9.6\ \mu C$

(B) $5.4\ \mu C$

(C) $24\ \mu C$

(D) $13.4\ \mu C$

Answer: (C) $24\ \mu C$ · Key from source paper

Q129 JEE Main 2019 · 10 Apr · Shift 1 MCQ

Figure shows charge (q) versus voltage (V) graph for series and parallel combination of two given capacitors. The capacitances are:

(see the figure above)

Q14. Figure shows charge (q) versus voltage (V) graph for series and parallel combination of two given capacitors. The capacitances are:

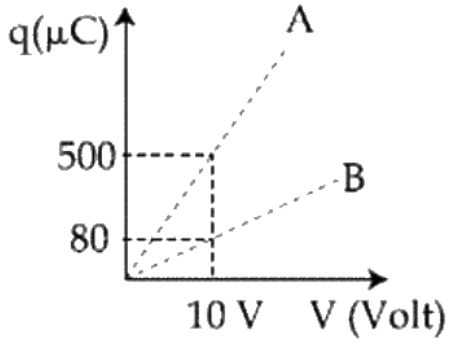

(1) 60 μF and 40 μF
(2) 50 μF and 30 μF
(3) 20 μF and 30 μF
(4) 40 μF and 10 μF

(A) 60 μF and 40 μF
(B) 50 μF and 30 μF
(C) 20 μF and 30 μF
(D) 40 μF and 10 μF

Answer: (D) 40 μF and 10 μF · Key from source paper

Q130 JEE Main 2019 · 9 Apr · Shift 1 MCQ

A capacitor with capacitance 5 μF is charged to 5 μC . If the plates are pulled apart to reduce the capacitance to 2 μF, how much work is done?

(A) 6.25×10^{-6} J
(B) 2.55×10^{-6} J
(C) 2.16×10^{-6} J
(D) 3.75×10^{-6} J

Answer: (D) 3.75×10^{-6} J · Key from source paper

Q131 JEE Main 2019 · 9 Apr · Shift 1 MCQ

Determine the charge on the capacitor in the following circuit:
(see the figure above)

Q19. Determine the charge on the capacitor in the following circuit:

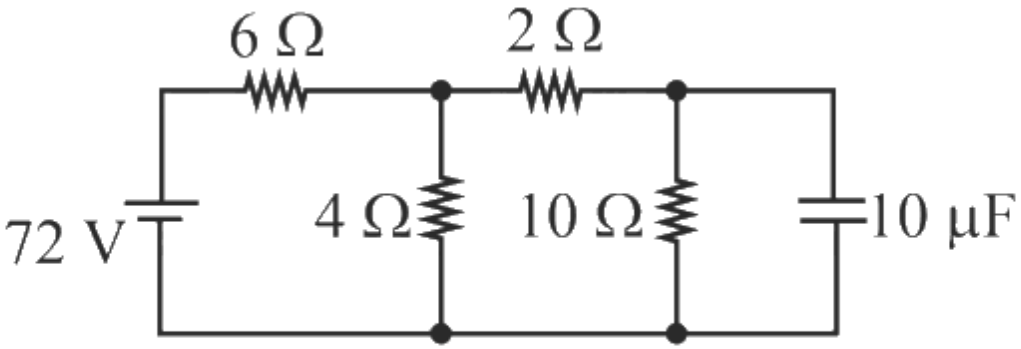

(1) 2 μC
(2) 60 μC
(3) 10 μC
(4) 200 μC

(A) 2 μC
(B) 60 μC
(C) 10 μC
(D) 200 μC

Answer: (D) 200 μC · Key from source paper

Q132 JEE Main 2019 · 9 Apr · Shift 2 MCQ

The parallel combination of two air filled parallel plate capacitors of capacitance C and nC is connected to a battery of voltage, V. When the capacitors are fully charged, the battery is removed and after that a dielectric material of dielectric constant K is placed the two plates of the first capacitor. The new potential difference of the combined system is:

(A) $\frac{(n+1)V}{(K+n)}$
(B) $\frac{nV}{K+n}$
(C) $\frac{V}{K+n}$
(D) V

Answer: (A) $\frac{(n+1)V}{(K+n)}$ · Key from source paper

Q133 JEE Main 2019 · 8 Apr · Shift 1 MCQ

Voltage rating of a parallel plate capacitor is 500 V. Its dielectric can withstand a maximum electric field of $10^6\ \mathrm{V/m}$. The plate area is $10^{-4}\ \mathrm{m}^2$. What is the dielectric constant if the capacitance is 15 pF ? given $\epsilon_0 = 8.86 \times 10^{-12}\ \mathrm{C^2/Nm^2}$

(A) 3.8
(B) 8.5
(C) 4.5
(D) 6.2

Answer: (B) 8.5 · Key from source paper

Q134 JEE Main 2019 · 8 Apr · Shift 2 MCQ

A parallel plate capacitor has 1μF capacitance. One of its two plates is given +2μC charge and the other plate, +4 μC charge. The potential difference developed across the capacitor is:

(A) 1 V
(B) 2 V
(C) 3 V
(D) 5 V

Answer: (A) 1 V · Key from source paper

Q135 JEE Main 2019 · 12 Jan · Shift 1 MCQ

The figure shows a capacitor of capacitance C connected to a battery via a switch, having a total charge Q on it, in steady-state. When the switch S is turned from position A to position B, the energy dissipated in the circuit is

(see the figure above)

Q15. The figure shows a capacitor of capacitance C connected to a battery via a switch, having a total charge Q on it, in steady-state. When the switch S is turned from position A to position B, the energy dissipated in the circuit is

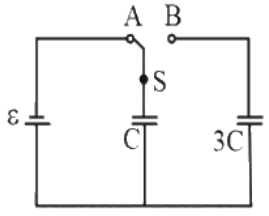

(1) $\frac{1}{8}\frac{Q^2}{C}$
(2) $\frac{3}{8}\frac{Q^2}{C}$
(3) $\frac{3}{4}\frac{Q^2}{C}$
(4) $\frac{5}{8}\frac{Q^2}{C}$

(A) $\frac{1}{8}\frac{Q^2}{C}$
(B) $\frac{3}{8}\frac{Q^2}{C}$
(C) $\frac{3}{4}\frac{Q^2}{C}$
(D) $\frac{5}{8}\frac{Q^2}{C}$

Answer: (B) $\frac{3}{8}\frac{Q^2}{C}$ · Key from source paper

Q136 JEE Main 2019 · 12 Jan · Shift 2 MCQ

A parallel plate capacitor with plates of area 1 m^2 each, are at a separation of 0.1 m. If the electric field between the plates is 100 N/C, the magnitude of charge on each plate is: (Take $\epsilon_0 = 8.85 \times 10^{-12}$ $\frac{C^2}{N\text{-}m^2}$)

(A) $8.85 \text{ x } 10^{-10} C$

(B) $6.85 \text{ x } 10^{-10} C$

(C) $9.85 \text{ x } 10^{-10} C$

(D) $7.85 \text{ x } 10^{-10} C$

Answer: (A) $8.85 \text{ x } 10^{-10} C$ · Key from source paper

Q137 JEE Main 2019 · 12 Jan · Shift 2 MCQ

In the circuit shown, find C if the effective capacitance of the whole circuit is to be 0.5 μF. All values in the circuit are in μF.

(see the figure above)

Q15. In the circuit shown, find C if the effective capacitance of the whole circuit is to be 0.5 μF. All values in the circuit are in μF.

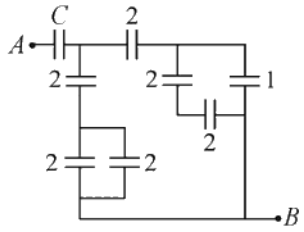

(1) $\frac{7}{10}\mu F$ (2) $4\mu F$

(3) $\frac{7}{11}\mu F$ (4) $\frac{6}{5}\mu F$

(A) $\frac{7}{10}\mu F$

(B) $4\mu F$

(C) $\frac{7}{11}\mu F$

(D) $\frac{6}{5}\mu F$

Answer: (C) $\frac{7}{11}\mu F$ · Key from source paper

Q138 JEE Main 2019 · 11 Jan · Shift 1 MCQ

In the figure shown below, the charge on the left plate of the 10F capacitor is -30C. The charge on the right plate of the 6F capacitor is:

(see the figure above)

Q16. In the figure shown below, the charge on the left plate of the 10F capacitor is -30C. The charge on the right plate of the 6F capacitor is:

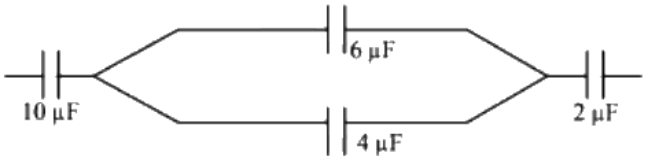

(1) $-12\mu C$ (2) $+12\mu C$

(3) $-18\mu C$ (4) $+18\mu C$

(A) $-12\mu C$

(B) $+12\mu C$

(C) $-18\mu C$

(D) $+18\mu C$

Answer: (D) $+18\mu C$ · Key from source paper

Q139 JEE Main 2019 · 11 Jan · Shift 2 MCQ

Seven capacitors, each of capacitance 2μF, are to be connected in a configuration to obtain an effective capacitance of $\left(\frac{6}{13}\right)\mu$F. Which of the combinations, shown in figures below, will achieve the desired value?

(see the figure above)

Q16. Seven capacitors, each of capacitance 2μF, are to be connected in a configuration to obtain an effective capacitance of $\left(\frac{6}{13}\right)\mu$F. Which of the combinations, shown in figures below, will achieve the desired value?

(1)

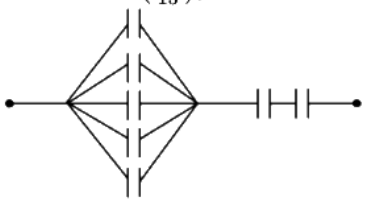

(2)

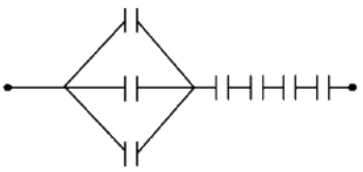

(3)

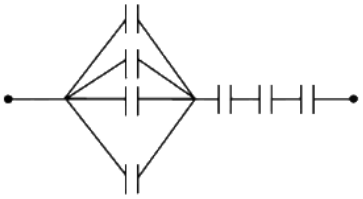

(4)

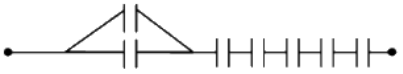

(A) *see figure*

(B) *see figure*

(C) *see figure*

(D) *see figure*

Answer: (B) · Key from source paper

Q140 JEE Main 2019 · 10 Jan · Shift 1 MCQ

A parallel plate capacitor is of area 6 cm^2 and a separation 3 mm. The gap is filled with three dielectric materials of equal thickness (see figure) with dielectric constant $K_1 = 10$, $K_2 = 12$ and $K_3 = 14$. The dielectric constant of a material which when fully inserted in above capacitor, gives

same capacitance would be:
(see the figure above)

Q16. A parallel plate capacitor is of area 6 cm^2 and a separation 3 mm. The gap is filled with three dielectric materials of equal thickness (see figure) with dielectric constant $K_1 = 10$, $K_2 = 12$ and $K_3 = 14$. The dielectric constant of a material which when fully inserted in above capacitor, gives same capacitance would be:

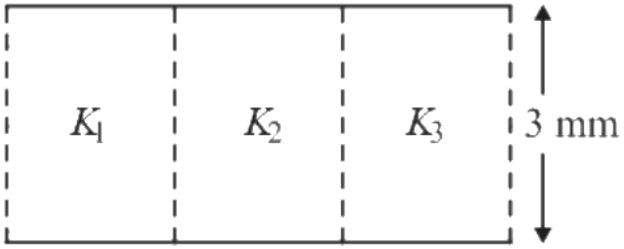

(1) 4
(2) 36
(3) 14
(4) 12

(A) 4
(B) 36
(C) 14
(D) 12

Answer: (D) 12 · Key from source paper

Q141 JEE Main 2019 · 10 Jan · Shift 2 MCQ

A parallel plate capacitor having capacitance $12\ \text{pF}$ is charged by a battery to a potential difference of $10\ \text{V}$ between its plates. The charging battery is now disconnected and a porcelain slab of dielectric constant 6.5 is slipped between the plates. The work done by the capacitor on the slab is

(A) $560\ \text{pJ}$
(B) $600\ \text{pJ}$
(C) $508\ \text{pJ}$
(D) $692\ \text{pJ}$

Answer: (C) $508\ \text{pJ}$ · Key from source paper

Q142 JEE Main 2019 · 9 Jan · Shift 1 MCQ

A parallel plate capacitor is made of two square plates of side a, separated by a distance d $d \ll a$. The lower triangular portion filled with a dielectric of dielectric constant K, as shown in the figure. Capacitance of this capacitor is:
(see the figure above)

Q16. A parallel plate capacitor is made of two square plates of side a, separated by a distance d $d \ll a$. The lower triangular portion filled with a dielectric of dielectric constant K, as shown in the figure. Capacitance of this capacitor is:

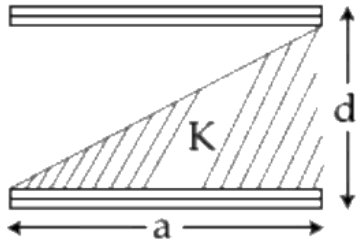

(1) $\frac{K\varepsilon_0 a^2}{2dK+1}$
(2) $\frac{K\varepsilon_0 a^2}{dK-1}\ln K$
(3) $\frac{K\varepsilon_0 a^2}{d}\ln K$
(4) $\frac{1}{2}\frac{K\varepsilon_0 a^2}{d}$

(A) $\frac{K\epsilon_0 a^2}{2dK+1}$
(B) $\frac{K\epsilon_0 a^2}{dK-1}\ln K$
(C) $\frac{K\epsilon_0 a^2}{d}\ln K$
(D) $\frac{1}{2}\frac{K\epsilon_0 a^2}{d}$

Answer: (B) $\frac{K\epsilon_0 a^2}{dK-1}\ln K$ · Key from source paper

Q143 JEE Main 2019 · 9 Jan · Shift 2 MCQ

A parallel plate capacitor with square plates is filled with four dielectrics of dielectric constants K_1, K_2, K_3, K_4 arranged as shown in the figure. The effective dielectric constant K will be:
(see the figure above)

Q16. A parallel plate capacitor with square plates is filled with four dielectrics of dielectric constants K_1, K_2, K_3, K_4 arranged as shown in the figure. The effective dielectric constant K will be:

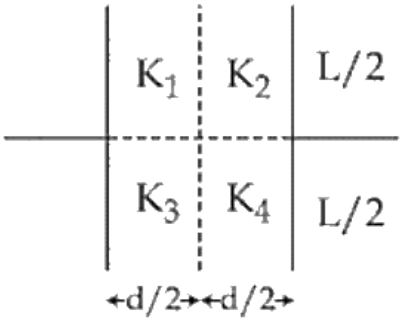

(1) $K = \left(\frac{K_1K_2}{K_1+K_2} + \frac{K_3.K_4}{K_3+K_4}\right)$
(2) $K = \frac{(K_1+K_2)(K_3+K_4)}{2(K_1+K_2+K_3+K_4)}$
(3) $K = \frac{(K_1+K_4)(K_2+K_3)}{2(K_1+K_2+K_3+K_4)}$
(4) $K = \frac{(K_1+K_2)(K_3+K_4)}{K_1+K_2+K_3+K_4}$

(A) $K = \left(\frac{K_1K_2}{K_1+K_2} + \frac{K_3.K_4}{K_3+K_4}\right)$

(B) $K = \frac{(K_1+K_2)(K_3+K_4)}{2(K_1+K_2+K_3+K_4)}$

(C) $K = \frac{(K_1+K_4)(K_2+K_3)}{2(K_1+K_2+K_3+K_4)}$

(D) $K = \frac{(K_1+K_2)(K_3+K_4)}{K_1+K_2+K_3+K_4}$

Answer: (A) $K = \left(\frac{K_1K_2}{K_1+K_2} + \frac{K_3.K_4}{K_3+K_4}\right)$ · Key from source paper

Q144 JEE Main 2018 · 16 Apr · Online MCQ

In the following circuit the switch S is closed at $t = 0$. The charge on the capacitor C_1 as a function of time will be given by $\left(C_{eq} = \frac{C_1C_2}{C_1+C_2}\right)$

(see the figure above)

Q16. In the following circuit the switch $S$is closed at $t = 0$. The charge on the capacitor C_1 as a function of time will be given by $\left(C_{eq} = \frac{C_1C_2}{C_1+C_2}\right)$

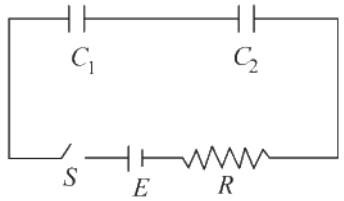

(1) $C_1E\left[1-\exp\left(-\frac{tR}{C_1}\right)\right]$

(2) $C_{eq}E\exp\left[-\frac{t}{RC_{eq}}\right]$

(3) $C_{eq}E\left[1-\exp\left(-\frac{t}{RC_{eq}}\right)\right]$

(4) $C_2E\left[1-\exp\left(-\frac{t}{RC_2}\right)\right]$

(A) $C_1E\left[1-\exp\left(-\frac{tR}{C_1}\right)\right]$

(B) $C_{eq}E\exp\left[-\frac{t}{RC_{eq}}\right]$

(C) $C_{eq}E\left[1-\exp\left(-\frac{t}{RC_{eq}}\right)\right]$

(D) $C_2E\left[1-\exp\left(-\frac{t}{RC_2}\right)\right]$

Answer: (C) $C_{eq}E\left[1-\exp\left(-\frac{t}{RC_{eq}}\right)\right]$ · Key from source paper

Q145 JEE Main 2018 · 15 Apr · Shift 1 MCQ

The equivalent capacitance between A and B in the circuit given below is:

(see the figure above)

Q15. The equivalent capacitance between A and B in the circuit given below is:

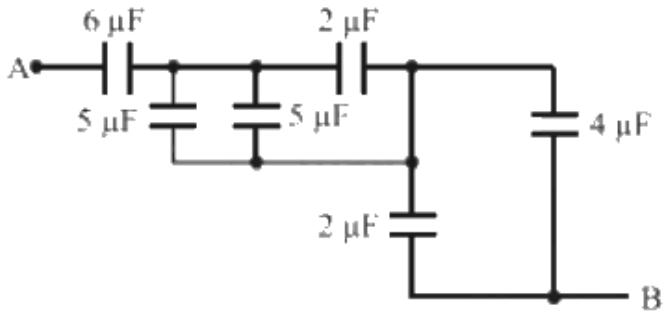

(1) $4.9\mu F$
(2) $3.6\mu F$
(3) $5.4\mu F$
(4) $2.4\mu F$

(A) $4.9\mu F$
(B) $3.6\mu F$
(C) $5.4\mu F$
(D) $2.4\mu F$

Answer: (D) $2.4\mu F$ · Key from source paper

Q146 JEE Main 2018 · 15 Apr · Shift 2 MCQ

A parallel plate capacitor with area $200\ \text{cm}^2$ and separation between the plates $1.5\ \text{cm}$, is connected across a battery of emf V. If the force of attraction between the plates is $25 \times 10^{-6}\ \text{N}$, the value of V is approximately:

$\left(\varepsilon_0 = 8.85 \times 10^{-12} \frac{\text{C}^2}{\text{N.m}}\right)^2$

(A) $150\ \text{V}$
(B) $100\ \text{V}$
(C) $250\ \text{V}$
(D) $300\ \text{V}$

Answer: (C) $250\ \text{V}$ · Key from source paper

Q147 JEE Main 2018 · 15 Apr · Shift 2 MCQ

A capacitor $\text{C}_1 = 1.0\mu\text{F}$ is charged up to a voltage $\text{V} = 60\ \text{V}$ by connecting it to battery B through switch (1), Now C_1 is disconnected from battery and connected to a circuit consisting of two uncharged capacitors $\text{C}_2 = 3.0\mu\text{F}$ and $\text{C}_3 = 6.0\mu\text{F}$ through a switch (2) as shown in the figure. The sum of final charges on C_2 and C_3 is:

(see the figure above)

EdLoop JEE

Q18. A capacitor C_1 is charged up to a voltage $V = 60$ V by connecting it to battery B through switch (1), Now C_1 is disconnected from battery and connected to a circuit consisting of two uncharged capacitors $C_2 = 3.0\mu F$ and $C_3 = 6.0\mu F$ through a switch (2) as shown in the figure. The sum of final charges on C_2 and C_3 is:

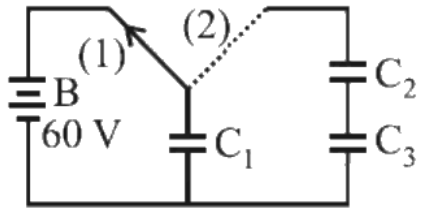

(1) $36\mu C$
(2) $20\mu C$
(3) $54\mu C$
(4) $40\mu C$

(A) $36\mu C$
(B) $20\mu C$
(C) $54\mu C$
(D) $40\mu C$

Answer: (D) $40\mu C$ · Checked by our team

Q148 JEE Main 2018 · 8 Apr · Offline MCQ

A parallel plate capacitor of capacitance 90 pF is connected to a battery of EMF 20 V. If a dielectric material of dielectric constant $K = \frac{5}{3}$ is inserted between the plates, the magnitude of the induced charge will be:

(A) 0.9 nC
(B) 1.2 nC
(C) 0.3 nC
(D) 2.4 nC

Answer: (B) 1.2 nC · Key from source paper

Q149 JEE Main 2017 · 9 Apr · Online MCQ

A combination of parallel plate capacitors is maintained at a certain potential difference.
(see the figure above)
When a 3 mm thick slab is introduced between all the plates, in order to maintain the same potential difference, the distance between the plates is increased by 2.4 mm. Find the dielectric constant of the slab.

Q17. A combination of parallel plate capacitors is maintained at a certain potential difference.

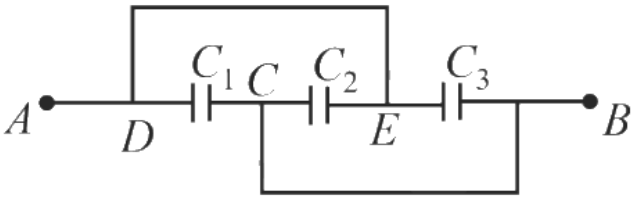

When a 3 mm thick slab is introduced between all the plates, in order to maintain the same potential difference, the distance between the plates is increased by 2.4 mm. Find the dielectric constant of the slab.

(1) 6
(2) 4
(3) 3
(4) 5

(A) 6
(B) 4
(C) 3
(D) 5

Answer: (D) 5 · Key from source paper

Q150 JEE Main 2017 · 2 Apr · Offline MCQ

A capacitance of 2 μF is required in an electrical circuit across a potential difference of 1.0 kV. A large number of 1 μF capacitors are available which can withstand a potential difference of not more than 300 V. The minimum number of capacitors required to achieve this is:

(A) 32
(B) 2
(C) 16
(D) 24

Answer: (A) 32 · Key from source paper

Q151 JEE Main 2017 · 2 Apr · Offline MCQ

In the given circuit diagram, when the current reaches a steady-state in the circuit, the charge on the capacitor of capacitance C will be:

(see the figure above)

Q17. In the given circuit diagram, when the current reaches a steady-state in the circuit, the charge on the capacitor of capacitance C will be:

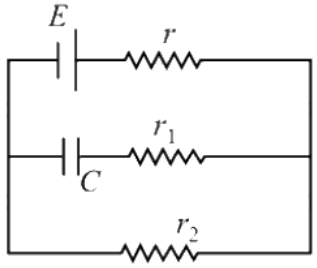

(1) $CE\frac{r_1}{r_1+r}$
(2) CE
(3) $CE\frac{r_1}{r_2+r}$
(4) $CE\frac{r_2}{r+r_2}$

(A) $CE\frac{r_1}{r_1+r}$
(B) CE
(C) $CE\frac{r_1}{r_2+r}$
(D) $CE\frac{r_2}{r+r_2}$

Answer: (D) $CE\frac{r_2}{r+r_2}$ · Key from source paper

Q152 JEE Main 2016 · 10 Apr · Online MCQ

Figure shows a network of capacitors where the number indicates capacitances in micro Farad. The value of capacitance C if the equivalent capacitance between point A and B is to be 1 μF is :

(see the figure above)

Q15. Figure shows a network of capacitors where the number indicates capacitances in micro Farad. The value of capacitance C if the equivalent capacitance between point A and B is to be 1 μF is :

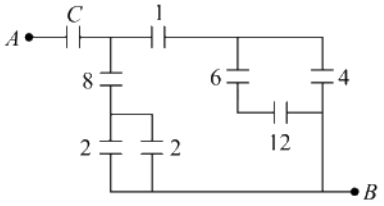

(1) $\frac{32}{23}\ \mu F$
(2) $\frac{31}{23}\mu F$
(3) $\frac{33}{23}\mu F$
(4) $\frac{34}{23}\mu F$

(A) $\frac{32}{23}\ \mu F$
(B) $\frac{31}{23}\ \mu F$
(C) $\frac{33}{23}\ \mu F$
(D) $\frac{34}{23}\ \mu F$

Answer: (A) $\frac{32}{23}\ \mu F$ · Key from source paper

Q153 JEE Main 2016 · 9 Apr · Online MCQ

Three capacitors each of 4 μF are to be connected in such a way that the effective capacitance is 6 μF . This can be done by connecting them

(A) all in series
(B) all in parallel
(C) two in parallel and one in series
(D) two in series and one in parallel

Answer: (D) two in series and one in parallel · Key from source paper

Q154 JEE Main 2016 · 3 Apr · Offline MCQ

A combination of capacitors is set up as shown in the figure. The magnitude of the electric field, due to a point charge Q (having a charge equal to the sum of the charges on the 4 μF and 9 μF capacitors), at a point distant 30 m from it, would equal:
(see the figure above)

Q14. A combination of capacitors is set up as shown in the figure. The magnitude of the electric field, due to a point charge Q (having a charge equal to the sum of the charges on the 4 μF and 9 μF capacitors), at a point distant 30 m from it, would equal:

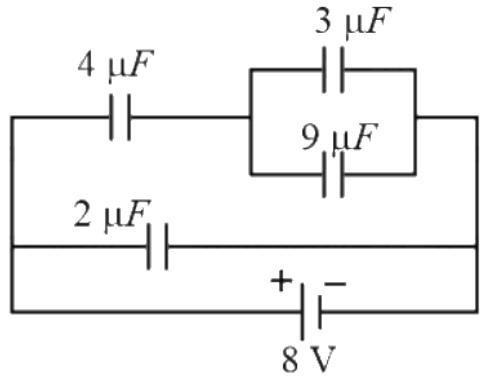

(1) 420 N/C
(2) 480 N/C
(3) 240 N/C
(4) 360 N/C

(A) 420 N/C
(B) 480 N/C
(C) 240 N/C
(D) 360 N/C

Answer: (A) 420 N/C · Key from source paper

Q155 JEE Main 2015 · 11 Apr · Online MCQ

In the figure is shown a system of four capacitors connected across a 10 V battery. The charge that will flow from switch S when it is closed is:
(see the figure above)

Q17. In the figure is shown a system of four capacitors connected across a 10 V battery. The charge that will flow from switch S when it is closed is:

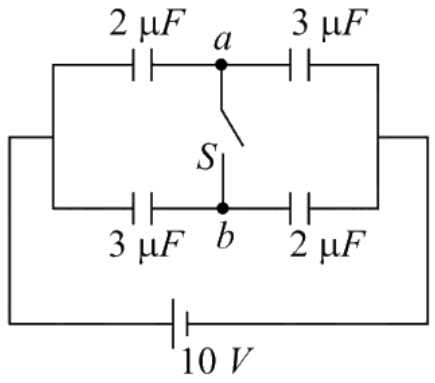

(1) Zero
(2) 20 μC from a to b
(3) 5 μC from b to a
(4) 5 μC from a to b

(A) Zero
(B) 20 μC from a to b
(C) 5 μC from b to a
(D) 5 μC from a to b

Answer: (C) 5 μC from b to a · Key from source paper

Q156 JEE Main 2015 · 4 Apr · Offline MCQ

In the given circuit, charge Q_2 on the 2 μF capacitor changes as C is varied from 1 μF to 3 μF. Q_2 as a function of 'C' is given properly by: (figures are drawn schematically and are not to scale)
(see the figure above)

Q17. In the given circuit, charge Q_2 on the 2 μF capacitor changes as C is varied from 1 μF to 3 μF. Q_2 as a function of 'C' is given properly by: (figures are drawn schematically and are not to scale)

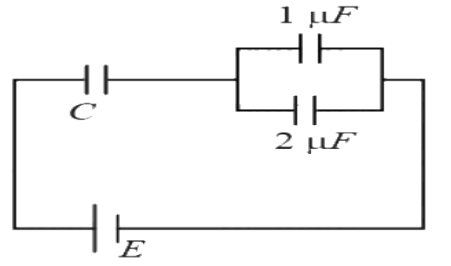

(1)
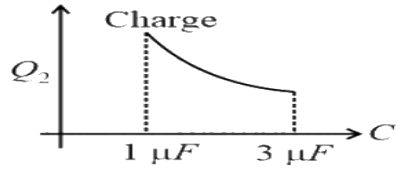

(2)
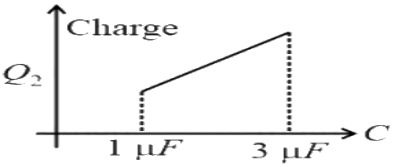

(3)
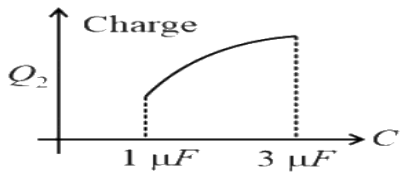

(4)
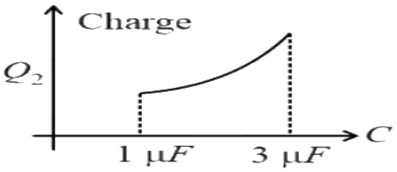

(A) *see figure*
(B) *see figure*
(C) *see figure*
(D) *see figure*

Answer: (C) · Key from source paper

Q157 JEE Main 2014 · 19 Apr · Online MCQ

The gap between the plates of a parallel plate capacitor of area A and distance between plates d, is filled with a dielectric whose relative permittivity varies linearly from ϵ_1 at one plate to ϵ_2 at the other. The capacitance of the capacitor is

(A) $\frac{\epsilon_0(\epsilon_2-\epsilon_1)A}{[d\ln(\epsilon_2/\epsilon_1)]}$
(B) $\frac{\epsilon_0(\epsilon_2+\epsilon_1)A}{2d}$
(C) $\frac{\epsilon_0(\epsilon_1+\epsilon_2)A}{d}$
(D) $\frac{\epsilon_0 A}{[d\ln(\epsilon_2/\epsilon_1)]}$

Answer: (A) $\frac{\epsilon_0(\epsilon_2-\epsilon_1)A}{[d\ln(\epsilon_2/\epsilon_1)]}$ · Key from source paper

Q158 JEE Main 2014 · 12 Apr · Online MCQ

The space between the plates of a parallel plate capacitor is filled with a 'dielectric' whose 'dielectric constant' varies with distance as per the relation:
$K(x) = K_o + \lambda x (\lambda = \text{ a constant })$
The capacitance C, of the capacitor, would be related to its vacuum capacitance C_o for the relation :

(A) $\mathrm{C} = \frac{\lambda \mathrm{d}}{\ln(1+K_o\lambda \mathrm{d})}C_o)$
(B) $\mathrm{C} = \frac{\lambda}{\mathrm{d}\cdot\ln(1+K_o\lambda \mathrm{d})}C_o)$
(C) $\mathrm{C} = \frac{\lambda \mathrm{d}}{\ln(1+\lambda \mathrm{d}/K_o)}C_o)$
(D) $\mathrm{C} = \frac{\lambda}{\mathrm{d}.\ln(1+K_o/\lambda \mathrm{d})}C_o)$

Answer: (C) $\mathrm{C} = \frac{\lambda \mathrm{d}}{\ln(1+\lambda \mathrm{d}/K_o)}C_o)$ · Key from source paper

Q159 JEE Main 2014 · 12 Apr · Online MCQ

The circuit shown here has two batteries of $8.0\ \mathrm{V}$ and $16.0\ \mathrm{V}$ and three resistors 3Ω, 9Ω and 9Ω and a *(see the figure above)*
capacitor of $5.0\mu\mathrm{F}$.
How much is the current I in the circuit in steady state?

Q18. The circuit shown here has two batteries of 8.0 V and 16.0 V and three resistors $3\Omega, 9\Omega$ and 9Ω and a capacitor of $5.0\mu F$.

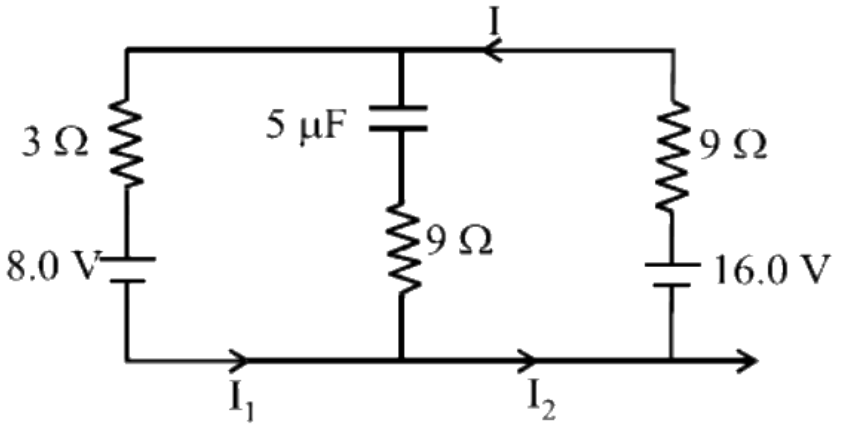

How much is the current I in the circuit in steady state?

(1) 1.6 A
(2) 0.67 A
(3) 2.5 A
(4) 0.25 A

(A) 1.6 A
(B) 0.67 A
(C) 2.5 A
(D) 0.25 A

Answer: (B) 0.67 A · Key from source paper

Q160 JEE Main 2014 · 11 Apr · Online MCQ

A parallel plate capacitor is made of two plates of length l, width w and separated by distance d. A dielectric slab (dielectric constant K) that fits exactly between the plates is held near the edge of the plates. It is pulled into the capacitor by a force $F = -\frac{\partial U}{\partial x}$ where U is the energy of the capacitor when dielectric is inside the capacitor up to distance x (See figure). If the charge on the capacitor is Q then the force on the dielectric when it is near the edge is:

(see the figure above)

Q17. A parallel plate capacitor is made of two plates of length l, width w and separated by distance d. A dielectric slab (dielectric constant K) that fits exactly between the plates is held near the edge of the plates. It is pulled into the capacitor by a force $F = -\frac{\partial U}{\partial x}$ where U is the energy of the capacitor when dielectric is inside the capacitor up to distance x (See figure). If the charge on the capacitor is Q then the force on the dielectric when

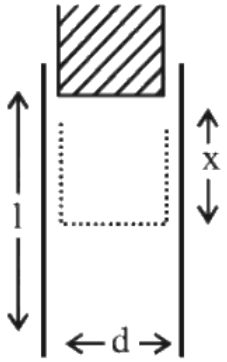

it is near the edge is:

(1) $\frac{Q^2 d}{2wl^2\varepsilon_0}K$

(2) $\frac{Q^2 W}{2dl^2\varepsilon_0}(K-1)$

(3) $\frac{Q^2 d}{2wl^2\varepsilon_0}(K-1)$

(4) $\frac{Q^2 w}{2dl^2\varepsilon_0}K$

(A) $\frac{Q^2 d}{2wl^2\varepsilon_0}K$

(B) $\frac{Q^2 W}{2dl^2\varepsilon_0}(K-1)$

(C) $\frac{Q^2 d}{2wl^2\varepsilon_0}(K-1)$

(D) $\frac{Q^2 w}{2dl^2\varepsilon_0}K$

Answer: (C) $\frac{Q^2 d}{2wl^2\varepsilon_0}(K-1)$ · Key from source paper

Q161 JEE Main 2014 · 9 Apr · Online MCQ

Three capacitances, each of 3 μF, are provided. These cannot be combined to provide the resultant capacitance of :

(A) 2 μF

(B) 6 μF

(C) 4.5 μF

(D) 1 μF

Answer: (B) 6 μF · Key from source paper

Q162 JEE Main 2014 · 6 Apr · Offline MCQ

A parallel plate capacitor is made of two circular plates separated by a distance of 5 mm and with a dielectric of dielectric constant 2.2 between them. When the electric field in the dielectric is 3×10^4 V/m, the charge density of the positive plate will be close to :

(A) 6×10^{-7} C/m^2

(B) 3×10^{-7} C/m^2

(C) 3×10^{4} C/m^2

(D) 6×10^{4} C/m^2

Answer: (A) 6×10^{-7} C/m^2 · Key from source paper

Q163 JEE Main 2013 · 25 Apr · Online MCQ

A parallel plate capacitor having a separation between the plates d, plate area A and material with dielectric constant K has capacitance C_0. Now one-third of the material is replaced by another material with dielectric constant 2 K, so that effectively there are two capacitors one with area $\frac{1}{3}$ A, dielectric constant 2 K and another with area $\frac{2}{3}$ A and dielectric constant K. If the capacitance of this new capacitor is C then $\frac{C}{C_0}$ is

(A) 1

(B) $\frac{4}{3}$

(C) $\frac{2}{3}$

(D) $\frac{1}{3}$

Answer: (B) $\frac{4}{3}$ · Key from source paper

Q164 JEE Main 2013 · 7 Apr · Offline MCQ

In an LCR circuit as shown below both switches are open initially. Now switch S_1 is closed, S_2 kept open. (q is charge on the capacitor and $\tau = RC$ is capacitive time constant). Which of the following statement is correct?

(see the figure above)

Q14. In an LCR circuit as shown below both switches are open initially. Now switch S_1 is closed, S_2 kept open. (q is charge on the capacitor and $\tau = RC$ is capacitive time constant). Which of the following statement is correct?

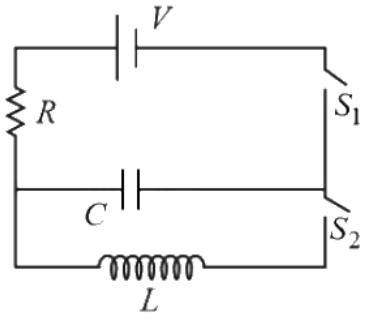

(1) At $t = 2\tau$, $q = CV\left(1 - e^{-2}\right)$

(2) At $t = \frac{\tau}{2}$, $q = CV\left(1 - e^{-1}\right)$

(3) Work done by the battery is half of the energy dissipated in the resistor

(4) At $t = \tau$, $q = CV/2$

(A) At t = 2τ, $q = CV\,(1 - e^{-2})$

(B) At t = $\frac{\tau}{2}$, $q = CV\,(1 - e^{-1})$

(C) Work done by the battery is half of the energy dissipated in the resistor

(D) At t = τ, $q = CV/2$

Answer: (A) At t = 2τ, $q = CV\,(1 - e^{-2})$ · Key from source paper

---

Q165 JEE Main 2013 · 7 Apr · Offline MCQ

Two capacitors C_1 and C_2 are charged to 120 V and 200 V respectively. It is found that by connecting them together the potential on each one can be made zero. Then:

(A) $3C_1 + 5C_2 = 0$

(B) $9C_1 = 4C_2$

(C) $5C_1 = 3C_2$

(D) $3C_1 = 5C_2$

Answer: (D) $3C_1 = 5C_2$ · Key from source paper

Q166 AIEEE 2012 · 26 May · Online MCQ

This question has Statement 1 and Statement 2 . Of the four choices given after the Statements, choose the one that best describes the two Statements. Statement 1: It is not possible to make a sphere of capacity 1 farad using a conducting material. Statement 2: It is possible for earth as its radius is 6.4×10^6 m.

(A) Statement 1 is true, Statement 2 is true, Statement 2 is the correct explanation of Statement 1.

(B) Statement 1 is false, Statement 2 is true.

(C) Statement 1 is true, Statement 2 is true, Statement 2 is not the correct explanation of Statement 1.

(D) Statement 1 is true, Statement 2 is false.

Answer: (D) Statement 1 is true, Statement 2 is false. · Key from source paper

---

Q167 AIEEE 2012 · 26 May · Online MCQ

The capacitor of an oscillatory circuit is enclosed in a container. When the container is evacuated, the resonance frequency of the circuit is 10kHz. When the container is filled with a gas, the resonance frequency changes by 50 Hz. The dielectric constant of the gas is

(A) 1.001

(B) 2.001

(C) 1.01

(D) 3.01

Answer: (C) 1.01 · Key from source paper

Q168 AIEEE 2012 · 12 May · Online MCQ

A series combination of n_1 capacitors, each of capacity C_1 is charged by source of potential difference 4 V. When another parallel combination of n_2 capacitors each of capacity C_2 is charged by a source of potential difference V, it has the same total energy stored in it as the first combination has. The value of C_2 in terms of C_1 is then

(A) $16\dfrac{n_2}{n_1}C_1$

(B) $\dfrac{2C_1}{n_1n_2}$

(C) $2\dfrac{n_2}{n_1}C_1$

(D) $\dfrac{16C_1}{n_1n_2}$

Answer: (D) $\dfrac{16C_1}{n_1n_2}$ · Key from source paper

Q169 AIEEE 2012 · 12 May · Online MCQ

A resistance R and a capacitance C are connected in series to a battery of negligible internal resistance through a key. The key is closed at $t = 0$. If after t sec the voltage across the capacitor was seven times the voltage across R, the value of t is

(A) $3RC\ell n2$

(B) $2RC\ell n2$

(C) $2RC\ln 7$

(D) $3RC\ell n7$

Answer: (A) $3RC\ell n2$ · Key from source paper

Q170 AIEEE 2012 · 7 May · Online MCQ

Two circuits (a) and (b) have charged capacitors of capacitance C, 2C and 3C with open switches. Charges on each of the capacitor are as shown in the figures. On closing the switches

(see the figure above)

Circuit (a) Circuit (b)

Q18. Two circuits (a) and (b) have charged capacitors of capacitance C, 2C and 3C with open switches. Charges on each of the capacitor are as shown in the figures. On closing the switches

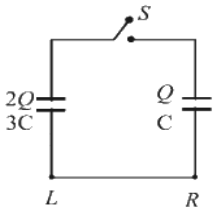

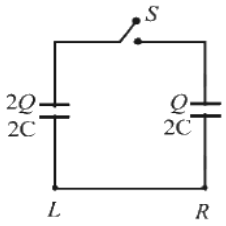

Circuit (a) Circuit (b)

(1) No charge flows in (a) but charge flows from R to L in (b)

(2) Charges flow from L to R in both (a) and (b)

(3) Charges flow from R to L in (a) and from L to R in (b)

(4) No charge flows in (a) but charge flows from L to R in (b)

(A) No charge flows in (a) but charge flows from R to L in (b)

(B) Charges flow from L to R in both (a) and (b)

(C) Charges flow from R to L in (a) and from L to R in (b)

(D) No charge flows in (a) but charge flows from L to R in (b)

Answer: (C) Charges flow from R to L in (a) and from L to R in (b) · Key from source paper

Q171 AIEEE 2012 · Offline MCQ

The figure shows an experimental plot for discharging of a capacitor in an $R-C$ circuit. The time constant τ

(see the figure above)

of this circuit lies between:

Q16. The figure shows an experimental plot for discharging of a capacitor in an $R-C$ circuit. The time constant τ

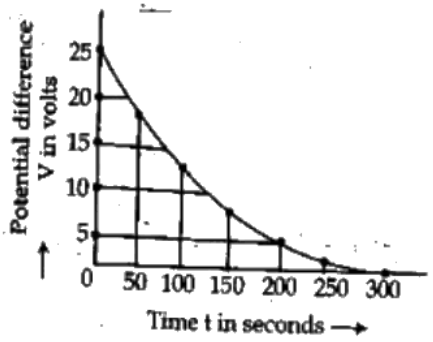

of this circuit lies between:

(1) 150 sec and 200 sec

(2) 0 and 50 sec

(3) 50 sec and 100 sec

(4) 100 sec and 150 sec

(A) 150 sec and 200 sec
(B) 0 and 50 sec
(C) 50 sec and 100 sec
(D) 100 sec and 150 sec

Answer: (D) 100 sec and 150 sec · Key from source paper

Q172 AIEEE 2011 MCQ

A resistor 'R' and $2\mu\mathrm{F}$ capacitor in series is connected through a switch to $200\ \mathrm{V}$ direct supply. Across the capacitor is a neon bulb that lights up at $120\ \mathrm{V}$. Calculate the value of R to make the bulb light up $5\ \mathrm{s}$ after the switch has been closed. $(\log_{10} 2.5 = 0.4)$

(A) $1.7 \times 10^5\ \Omega$
(B) $2.7 \times 10^6\ \Omega$
(C) $3.3 \times 10^7\ \Omega$
(D) $1.3 \times 10^4\ \Omega$

Answer: (B) $2.7 \times 10^6\ \Omega$ · Key from source paper

Q173 AIEEE 2010 MCQ

Let C be the capacitance of a capacitor discharging through a resistor R. Suppose t_1 is the time taken for the energy stored in the capacitor to reduce to half its initial value and t_2 is the time taken for the charge to reduce to one-fourth its initial value. Then the ratio t_1/t_2 will be

(A) 1
(B) $\frac{1}{2}$
(C) $\frac{1}{4}$
(D) 2

Answer: (C) $\frac{1}{4}$ · Key from source paper

Q174 AIEEE 2008 MCQ

A parallel plate capacitor with air between the plates has a capacitance of $9\ \mathrm{pF}$. The separation between its plates is ' d '. The space between the plates is now filled with two dielectrics. One of the dielectrics has dielectric constant $k_1 = 3$ and thickness $\frac{d}{3}$ while the other one has dielectric constant $\mathrm{k}_2 = 6$ and thickness $\frac{2\mathrm{d}}{3}$. Capacitance of the capacitor is now

(A) $1.8\ \mathrm{pF}$
(B) $45\ \mathrm{pF}$
(C) $40.5\ \mathrm{pF}$
(D) $20.25\ \mathrm{pF}$

Answer: (C) $40.5\ \mathrm{pF}$ · Key from source paper

Q175 AIEEE 2007 MCQ

A battery is used to charge a parallel plate capacitor till the potential difference between the plates becomes equal to the electromotive force of the battery. The ratio of the energy stored in the capacitor and the work done by the battery will be

(A) 1
(B) 2
(C) $\frac{1}{4}$
(D) $\frac{1}{2}$

Answer: (D) $\frac{1}{2}$ · Key from source paper

Q176 AIEEE 2007 MCQ

A parallel plate condenser with a dielectric of dielectric constant K between the plates has a capacity C and is charged to a potential V volts. The dielectric slab is slowly removed from between the plates and then reinserted. The net work done by the system in this process is

(A) $1/2(\mathrm{K}-1)\mathrm{CV}^2$
(B) $\mathrm{CV}^2(\mathrm{K}-1)/\mathrm{K}$
(C) $(\mathrm{K}-1)\mathrm{CV}^2$
(D) zero

Answer: (D) zero · Key from source paper

Q177 AIEEE 2005 MCQ

A fully charged capacitor has a capacitance ' C ' it is discharged through a small coil of resistance wire embedded in a thermally insulated block of specific heat capacity ' s ' and mass ' m '. If the temperature of the block is raised by ' $\Delta \mathrm{T}$ '. The potential difference V across the capacitor is

(A) $\sqrt{\frac{2mC\Delta T}{s}}$
(B) $\frac{\mathrm{mC}\Delta \mathrm{T}}{\mathrm{s}}$
(C) $\frac{\mathrm{ms}\Delta \mathrm{T}}{\mathrm{c}}$
(D) $\sqrt{\frac{2ms\Delta T}{C}}$

Answer: (D) $\sqrt{\frac{2ms\Delta T}{C}}$ · Key from source paper

Q178 AIEEE 2005 MCQ

A parallel plate capacitor is made by stacking n equally spaced plates connected alternatively. If the capacitance between any two adjacent plates is C then the resultant capacitance is

(A) $(n-1)C$
(B) $(n+1)C$
(C) C
(D) nC

Answer: (A) $(n-1)C$ · Key from source paper

Q179 AIEEE 2003 MCQ

A sheet of aluminium foil of negligible thickness is introduced between the plates of a capacitor. The capacitance of the capacitor

(A) decreases
(B) remains unchanged
(C) becomes infinite
(D) increases

Answer: (B) remains unchanged · Key from source paper

Q180 AIEEE 2003 MCQ

The work done in placing a charge of 8×10^{-18} coulomb on a condenser of capacity 100 micro-farad is

(A) 16×10^{-32} joule
(B) 3.1×10^{-26} joule
(C) 4×10^{-10} joule
(D) 32×10^{-32} joule

Answer: (D) 32×10^{-32} **joule** · Key from source paper

Q181 AIEEE 2002 MCQ

If there are n capacitors in parallel connected to V volt source, then the energy stored is equal to

(A) CV
(B) $\frac{1}{2}\mathrm{nCV}^2$
(C) CV^2
(D) $\frac{1}{2n}CV^2$

Answer: (B) $\frac{1}{2}\mathrm{nCV}^2$ · Key from source paper

Q182 AIEEE 2002 MCQ

Capacitance (in F) of a spherical conductor with radius 1 m is

(A) 1.1×10^{-10}

(B) 10^{-6}

(C) 9×10^{-9}

(D) 10^{-3}

Answer: (A) 1.1×10^{-10} · Key from source paper

EdLoop JEE