EdLoop

EdLoop JEE

PHYSICS · JEE MAIN

Current Electricity

Previous Year Questions with answers

383 questions · **186** papers · **2002–2026** · newest paper first

Step-by-step solutions for every question: free in the EdLoop JEE app (Google Play) · pyq.edloop.in

What is in this PDF: every Current Electricity question we hold from past JEE Main and AIEEE papers, with its options and answer. Where an answer comes from a source other than the official final key, it says so next to the answer.

Step-by-step solutions for every question are free in the EdLoop JEE app (Google Play) and on app.edloop.in. More chapters: pyq.edloop.in/free-pdfs/

EdLoop

Chapter at a glance

6.5%	383	150 of 162	277 / 106
of Physics questions, 2019–2026	questions, 2002–2026	papers asked it, 2019–2026	MCQ / numerical, 2002–2026

Trend. Steady: 1.6 questions per paper in 2024–2026 against 2 in 2019–2023.

Questions per year

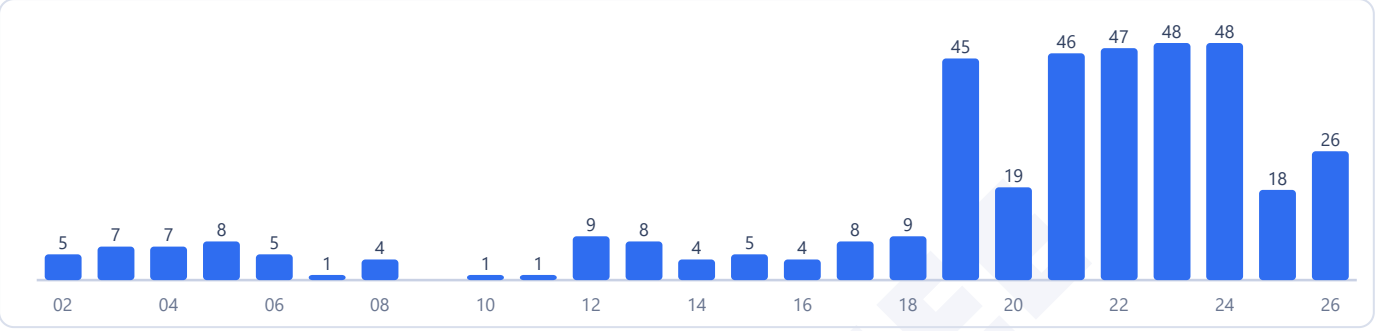

Counts are the questions we hold: 383 in 186 papers. No question in this chapter was found repeated across papers.

Most-asked topics in this chapter (2002–2026)

Circuits & Kirchhoff's Laws	162
Current & Resistance	88
Measuring Instruments	86
Heating Effect & Power	47

How often it comes up

Current electricity stands at the top of JEE Main physics in question volume, codified under Unit 12: Current Electricity in the Class 12 NTA syllabus, holding rank 1 among all 29 physics chapters. In the testing window spanning 2019 to 2026, the exam produced 297 current electricity questions across 162 test shifts, giving an average frequency of 1.8 questions per paper. The chapter featured in 150 of those 162 papers, and questions have been set every single year without exception. Over the recent 2024 to 2026 stretch, testing registered 92 problems across 58 shifts, which amounts to 1.6 questions per paper and represents a 5.9 percent share of the subject. This share shows a trend that is down compared to the 6.4 percent share from 86 questions in the 2002 to 2018 era. During the 2026 exam cycle, 26 questions were distributed across 19 papers, with problems appearing in 16 separate sessions. Notably, 106 questions between 2019 and 2026 appeared as numerical answer questions, making current electricity the single largest source of numerical response problems in the physics exam.

Most-asked topics

The exam distributes questions across four distinct areas of study:

- **Circuits & Kirchhoff's Laws**: 162 questions historically, with 135 asked between 2019 and 2026, continuing in 2026. This area examines multi-loop mesh networks, nodal voltage analysis, symmetric resistor cubes and polygons, delta-star transformations, and bridge circuits.
- **Measuring Instruments**: 86 questions in total, including 66 from 2019 to 2026 and appearing in 2026. Core concepts evaluate meter bridge balancing, potentiometer comparative EMF measurements, galvanometer conversion to ammeters and voltmeters, and percentage error analysis.
- **Current & Resistance**: 88 problems overall, with 64 during the 2019 to 2026 period, tested through 2026. Questions explore microscopic drift velocity, electron mobility, temperature coefficients of resistance, color

coding, and non-uniform cross-section conductors.
- **Heating Effect & Power**: 47 lifetime questions, with 32 between 2019 and 2026, tested up to 2026. Problems test Joule heating, maximum power transfer theorem, rated power of connected light bulbs, and electrical efficiency in DC networks.

What the questions look like

Current electricity questions in JEE Main blend conceptual rules with quantitative network reductions:

- **Meter bridge balance adjustments**: Determining an unknown resistance using a meter wire, or calculating how the null position shifts along the wire when an additional resistance is connected in parallel with one arm.
- **Galvanometer conversions**: Finding the required shunt resistance to convert a sensitive galvanometer into an ammeter of a specified range, or adding a series multiplier resistor to construct a voltmeter.
- **Microscopic transport calculations**: Connecting macroscopic current and applied voltage to microscopic parameters like carrier concentration, relaxation time, and electron mobility.
- **Complex symmetric resistor frameworks**: Calculating the equivalent resistance across opposite vertices of regular geometric grids, such as hexagonal webs with radial spokes.

How to practise it

Prioritize nodal analysis over long Kirchhoff loop equations. Assigning potential values to distinct junctions and writing current conservation equations at each node is faster and significantly less error-prone when dealing with multi-cell circuits.

Focus on laboratory measuring instruments. Understand the working principles of the meter bridge and Wheatstone bridge. For galvanometer modifications, practice deriving the shunt resistance formula from first principles by equating the potential differences across the parallel branches.

Because 106 questions in the modern era were numerical answer questions, practice working through complete calculations without rounding prematurely. Pay close attention to unit conversions between millimeters, centimeters, and standard SI units when dealing with wire resistance formulas.

EdLoop JEE

Q1 JEE Main 2026 · 6 Apr · Shift 1 · Numerical

Refer to the circuit diagram given below. The heat generated across the 6 Ω resistance in 100 second is $\frac{\alpha}{100}$ J. The value of α is _____. (Nearest integer)

(see the figure above)

Inscript

Refer to the circuit diagram given below. The heat generated across the 6 Ω resistance in 100 second is $\frac{\alpha}{100}$ J . The value of α is _____. (Nearest integer)

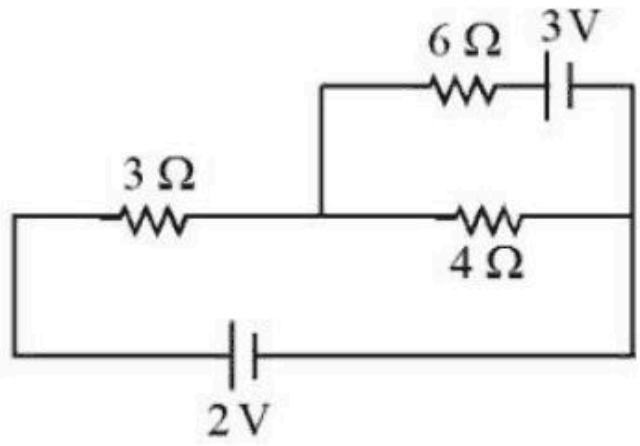

Numerical value type: the answer is a number.

Answer: 3477. · Official NTA final key

Q2 JEE Main 2026 · 6 Apr · Shift 2 · Numerical

A moving coil of galvanometer when shunted with 2 Ω resistance gives a full scale deflection for a current of 500 mA. When a resistance of 470 Ω is connected in series it gives a full scale deflection for 10 V potential applied on it. The value of resistance of galvanometer coil is _____ Ω.

Numerical value type: the answer is a number.

Answer: 50. · Official NTA final key

Q3 JEE Main 2026 · 6 Apr · Shift 2 · Numerical

Two cells of emfs 1 V and 2 V and internal resistance 2 Ω and 1 Ω, respectively connected in parallel, gave a current of 1 A through an external resistance. If the polarity of one cell is reversed, then value of current through the external resistance will be $\frac{\alpha}{5}$ A. The value of α is _____.

Numerical value type: the answer is a number.

Answer: 3. · Official NTA final key

Q4 JEE Main 2026 · 5 Apr · Shift 1 · MCQ

Refer to the figure given below. The values of I_1, I_2 and I_3 are _____.

(see the figure above)

Refer to the figure given below. The values of I_1, I_2 and I_3 are _____.

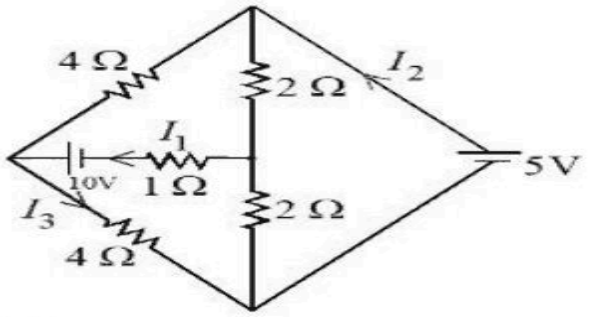

Options :

6952781138. $I_1 = 2.5$ A, $I_2 = 1.875$ A, $I_3 = 1.875$ A

6952781139. $I_1 = 1.875$ A, $I_2 = 2.5$ A, $I_3 = 1.875$ A

6952781140. $I_1 = 1.875$ A, $I_2 = 1.875$ A, $I_3 = 2.5$ A

6952781141. $I_1 = 2.5$ A, $I_2 = 2.5$ A, $I_3 = 1.875$ A

(A) $I_1 = 2.5$ A, $I_2 = 1.875$ A, $I_3 = 1.875$ A

(B) $I_1 = 1.875$ A, $I_2 = 2.5$ A, $I_3 = 1.875$ A

(C) $I_1 = 1.875$ A, $I_2 = 1.875$ A, $I_3 = 2.5$ A

(D) $I_1 = 2.5$ A, $I_2 = 2.5$ A, $I_3 = 1.875$ A

Answer: (A) $I_1 = 2.5$ A, $I_2 = 1.875$ A, $I_3 = 1.875$ A · Official NTA final key

Q5 JEE Main 2026 · 5 Apr · Shift 1 MCQ

Refer to the figure given below, current between terminals A and B is _____ A.

(see the figure above)

Refer to the figure given below, current between terminals A and B is _____ A.

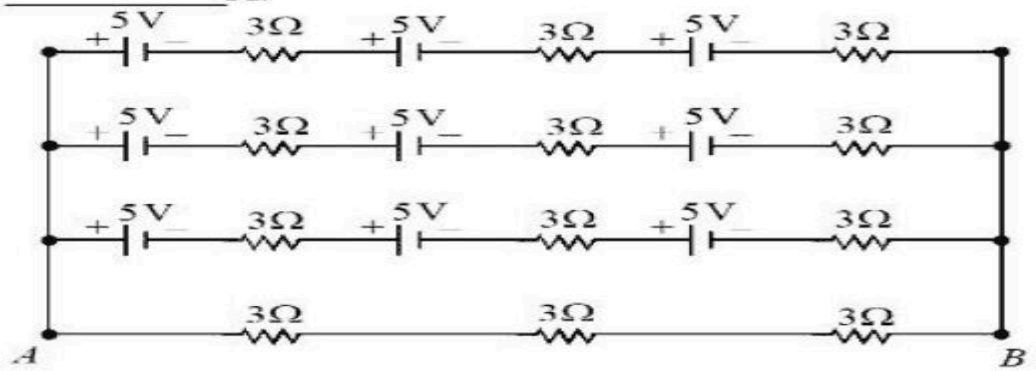

Options :

6952781154. 12.5

6952781155. 1.25

6952781156. 7.5

6952781157. 5

(A) 12.5
(B) 1.25
(C) 7.5
(D) 5

Answer: (B) 1.25 · Official NTA final key

Q6 JEE Main 2026 · 5 Apr · Shift 2 Numerical

When an external resistance of 5 Ω is connected across terminals of a cell, a current of 0.25 A flows through it. When the 5 Ω resistor is replaced by a 2 Ω resistor, a current of 0.5 A flows through it. The internal resistance of the cell is _____ Ω.

Numerical value type: the answer is a number.

Answer: 1. · Official NTA final key

Q7 JEE Main 2026 · 4 Apr · Shift 1 MCQ

A voltmeter with internal resistance of x Ω can be used to measure upto 20 V. In order to increase its measuring range to 30 V, the required modification is to _____.

(A) connect resistor of $\frac{x}{2}\Omega$, in series with voltmeter.
(B) connect resistor of $\frac{x}{2}\Omega$, in parallel to voltmeter.
(C) connect a resistor of x Ω in series with voltmeter.
(D) connect resistor of $2x$ Ω in parallel to voltmeter.

Answer: (A) connect resistor of $\frac{x}{2}\Omega$, in series with voltmeter. · Official NTA final key

---

Q8 JEE Main 2026 · 4 Apr · Shift 1 MCQ

The voltage and the current between A and B points shown in the circuit are _____.

(see the figure above)

EdLoop JEE

The voltage and the current between A and B points shown in the circuit are_____.

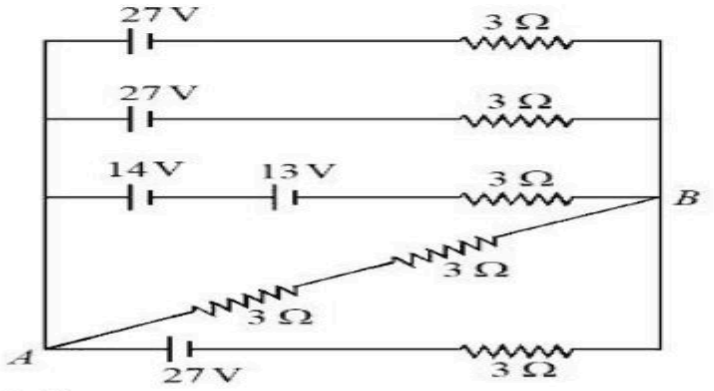

Options :

695278919. 24 V, 12 A

695278920. 24 V, 4 A

695278921. 18 V, 12 A

695278922. 27 V, 4 A

(A) 24 V, 12 A

(B) 24 V, 4 A

(C) 18 V, 12 A

(D) 27 V, 4 A

Answer: (B) 24 V, 4 A · Official NTA final key

Q9 JEE Main 2026 · 2 Apr · Shift 2 MCQ

Two resistors of 200 Ω and 400 Ω are connected in series with a battery of 100 V. A bulb rated at 200 V, 100 W is connected across the 400 Ω resistance. The potential drop across the bulb is _____ V.

(A) 25

(B) 50

(C) 66.6

(D) 100

Answer: (B) 50 · Official NTA final key

Q10 JEE Main 2026 · 28 Jan · Shift 1 MCQ

In the potentiometer, when the cell in the secondary circuit is shunted with 4 Ω resistance, the balance is obtained at the length 120 cm of wire. Now when the same cell is shunted with 12 Ω resistance, the balance is shifted to a length of 180 cm. The internal resistance of cell is _____ Ω

(A) 12
(B) 4
(C) 6
(D) 3

Answer: (B) 4 · Official NTA final key

Q11 JEE Main 2026 · 28 Jan · Shift 1 MCQ

For the two cells having same EMF E and internal resistance r, the current passing through the external resistor 6 Ω is same when both the cells are connected either in parallel or in series. The value of internal resistance r is _____ Ω.

(A) 9
(B) 3
(C) 6
(D) 4

Answer: (C) 6 · Official NTA final key

Q12 JEE Main 2026 · 28 Jan · Shift 1 Numerical

The equivalent resistance between the points A and B in the following circuit is $\frac{x}{5}\,\Omega$. The value of x is _____.

(see the figure above)

Q.49 The equivalent resistance between the points A and B in the following circuit is $\frac{x}{5}\Omega$. The value of x is _____.

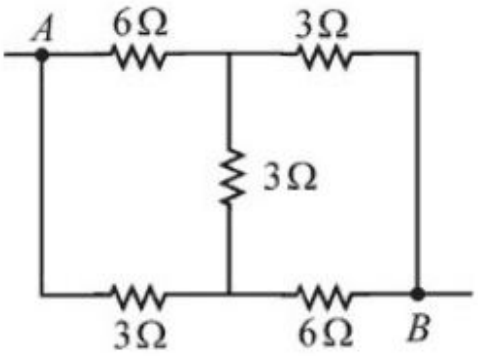

Numerical value type: the answer is a number.

Answer: 21. · Official NTA final key

Q13 JEE Main 2026 · 28 Jan · Shift 2 MCQ

A Wheatstone bridge is initially at room temperature and all arms of the bridge have same value of resistances ($R_1 = R_2 = R_3 = R_4$). When R_3 resistance is heated to some temperature, its resistance

value has gone up by 10%. The potential difference ($V_a - V_b$) after R_3 is heated is _____ V.

(see the figure above)

Q.30 A Wheatstone bridge is initially at room temperature and all arms of the bridge have same value of resistances ($R_1 = R_2 = R_3 = R_4$). When R_3 resistance is heated to some temperature, its resistance value has gone up by 10%. The potential difference ($V_a - V_b$) (after R_3 is heated) is _____V.

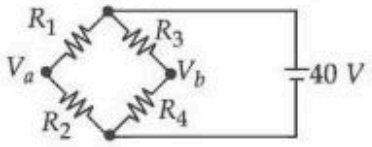

Options

1. 0
2. 0.95
3. 2
4. 1.05

(A) 0
(B) 0.95
(C) 2
(D) 1.05

Answer: (B) 0.95 · Official NTA final key

Q14 JEE Main 2026 · 24 Jan · Shift 1 MCQ

Two resistors of 100 Ω each are connected in series with a 9 V battery. A voltmeter of 400 Ω resistance is connected to measure the voltage drop across one of the resistors. The voltmeter reading is _____ V.

(A) 2
(B) 3
(C) 4
(D) 4.5

Answer: (C) 4 · Official NTA final key

Q15 JEE Main 2026 · 24 Jan · Shift 1 MCQ

Two resistors 2 Ω and 3 Ω are connected in the gaps of bridge as shown in figure. The null point is obtained with the contact of jockey at some point on wire XY. When an unknown resistor is connected in parallel with 3 Ω resistor, the null point is shifted by 22.5 cm toward Y. The resistance of unknown resistor is _____ Ω.

(see the figure above)

Q.41 Two resistors 2 Ω and 3 Ω are connected in the gaps of bridge as shown in figure. The null point is obtained with the contact of jockey at some point on wire XY. When an unknown resistor is connected in parallel with 3 Ω resistor, the null point is shifted by 22.5 cm toward Y. The resistance of unknown resistor is _____ Ω .

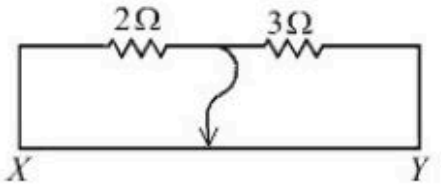

Options
1. 2
2. 3
3. 4
4. 1

(A) 2
(B) 3
(C) 4
(D) 1

Answer: (A) 2 · Official NTA final key

Q16 JEE Main 2026 · 24 Jan · Shift 2 MCQ

A regular hexagon is formed by six wires each of resistance r Ω and the corners are joined to the centre by wires of same resistance. If the current enters at one corner and leaves at the opposite corner, the equivalent resistance of the hexagon between the two opposite corners will be

(A) $\frac{4}{5}r$
(B) $\frac{3}{4}r$
(C) $\frac{3}{5}r$
(D) $\frac{5}{8}r$

Answer: (A) $\frac{4}{5}r$ · Official NTA final key

Q17 JEE Main 2026 · 24 Jan · Shift 2 MCQ

A moving coil galvanometer of resistance 100 Ω shows a full scale deflection for a current of 1 mA. The value of resistance required to convert this galvanometer into an ammeter, showing full scale deflection for a current of 5 mA, is _____ Ω.

(A) 25
(B) 2.5
(C) 10
(D) 0.5

Answer: (A) 25 · Official NTA final key

Q18 JEE Main 2026 · 24 Jan · Shift 2 Numerical

In a meter bridge experiment to determine the value of unknown resistance, first the resistances 2 Ω and 3 Ω are connected in the left and right gaps of the bridge and the null point is obtained at a distance l cm from the left. Now when an unknown resistance x Ω is connected in parallel to 3 Ω resistance, the null point is shifted by 10 cm to the right of wire. The value of unknown resistance x is _____ Ω.

Numerical value type: the answer is a number.

Answer: 6. · Official NTA final key

Q19 JEE Main 2026 · 23 Jan · Shift 1 MCQ

A wire of uniform resistance λ Ω/m is bent into a circle of radius r and another piece of wire with length $2r$ is connected between points A and B (AOB) as shown in figure. The equivalent resistance between points A and B is _____ Ω.

(see the figure above)

Q.35 A wire of uniform resistance λ Ω/m is bent into a circle of radius r and another piece of wire with length $2r$ is connected between points A and B (AOB) as shown in figure. The equivalent resistance between points A and B is _____ Ω.

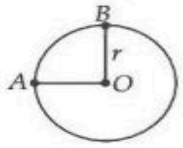

Options

1. $\frac{3\pi\lambda r}{8}$
2. $2\pi\lambda r$
3. $(\pi+1)2r\lambda$
4. $\frac{6\pi\lambda r}{3\pi + 16}$

(A) $\frac{3\pi\lambda r}{8}$

(B) $2\pi\lambda r$

(C) $(\pi+1)2r\lambda$

(D) $\frac{6\pi\lambda r}{3\pi+16}$

Answer: (D) $\frac{6\pi\lambda r}{3\pi+16}$ · Official NTA final key

Q20 JEE Main 2026 · 23 Jan · Shift 2 MCQ

To compare EMF of two cells using potentiometer the balancing lengths obtained are 200 cm and 150 cm. The least count of scale is 1 cm. The percentage error in the ratio of EMFs is _____.

(A) 1.65

(B) 1.55

(C) 1.45

(D) 1.75

Dropped by NTA. Full marks to everyone. · Official NTA final key

Q21 JEE Main 2026 · 22 Jan · Shift 1 MCQ

A meter bridge with two resistances R_1 and R_2 as shown in figure was balanced (null point) at 40 cm from the point P. The null point changed to 50 cm from the point P, when $16\,\Omega$ resistance is connected in parallel to R_2. The values of resistances R_1 and R_2 are _____.

(see the figure above)

Q.32 A meter bridge with two resistances R_1 and R_2 as shown in figure was balanced (null point) at 40 cm from the point P. The null point changed to 50 cm from the point P, when 16 Ω resistance is connected in parallel to R_2. The values of resistances R_1 and R_2 are _____.

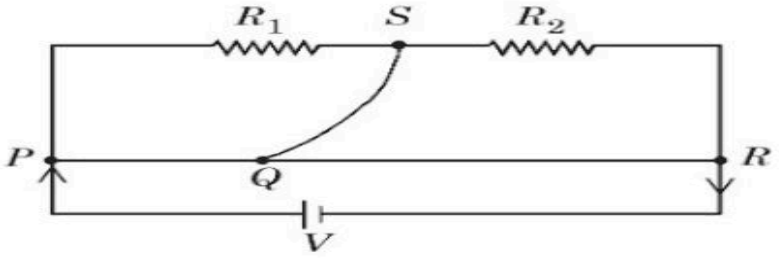

Options

1. $R_2 = 4\ \Omega,\ R_1 = \frac{4}{3}\ \Omega$
2. $R_2 = 16\ \Omega,\ R_1 = \frac{16}{3}\ \Omega$
3. $R_2 = 8\ \Omega,\ R_1 = \frac{16}{3}\ \Omega$
4. $R_2 = 12\ \Omega,\ R_1 = \frac{12}{3}\ \Omega$

(A) $R_2 = 4\,\Omega,\ R_1 = \frac{4}{3}\,\Omega$

(B) $R_2 = 16\,\Omega,\ R_1 = \frac{16}{3}\,\Omega$

(C) $R_2 = 8\,\Omega,\ R_1 = \frac{16}{3}\,\Omega$

(D) $R_2 = 12\,\Omega,\ R_1 = \frac{12}{3}\,\Omega$

Answer: (C) $R_2 = 8\,\Omega,\ R_1 = \frac{16}{3}\,\Omega$ · Official NTA final key

Q22 JEE Main 2026 · 22 Jan · Shift 2 Numerical

A cylindrical conductor of length 2 m and area of cross-section 0.2 mm^2 carries an electric current of 1.6 A when its ends are connected to a 2 V battery. Mobility of electrons in the conductor is $\alpha \times 10^{-3}$ m^2/V.s. The value of α is :

(electron concentration $= 5 \times 10^{28}$/m^3 and electron charge $= 1.6 \times 10^{-19}$ C)

Numerical value type: the answer is a number.

Answer: 1. · Official NTA final key

Q23 JEE Main 2026 · 21 Jan · Shift 1 Numerical

The heat generated in 1 minute between points A and B in the given circuit, when a battery of 9 V with internal resistance of 1 Ω is connected across these points is _____ J.

(see the figure above)

Q.47 The heat generated in 1 minute between points A and B in the given circuit, when a battery of 9 V with internal resistance of 1 Ω is connected across these points is _____ J.

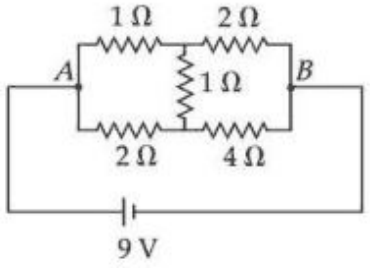

Numerical value type: the answer is a number.

Answer: 1080. · Official NTA final key

Q24 JEE Main 2026 · 21 Jan · Shift 2 MCQ

The total length of potentiometer wire AB is 50 cm in the arrangement as shown in figure. If P is the point where the galvanometer shows zero reading then the length AP is _____ cm.

(see the figure above)

Q.28 The total length of potentiometer wire AB is 50 cm in the arrangement as shown in figure. If P is the point where the galvanometer shows zero reading then the length AP is _____ cm.

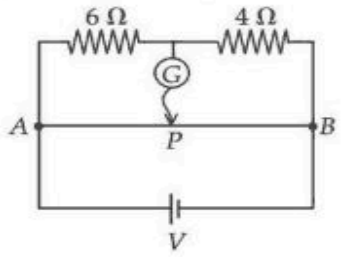

Options

1. 30
2. 25
3. 15
4. 20

(A) 30
(B) 25
(C) 15
(D) 20

Answer: (A) 30 · Official NTA final key

Q25 JEE Main 2026 · 21 Jan · Shift 2 MCQ

Two known resistances of $R\,\Omega$ and $2R\,\Omega$ and one unknown resistance $X\,\Omega$ are connected in a circuit as shown in figure. If the equivalent resistance between points A and B in the circuit is $X\,\Omega$, then the value of X is _____ Ω.

(see the figure above)

EdLoop JEE

Q.31 Two known resistances of $R\ \Omega$ and $2R\ \Omega$ and one unknown resistance $X\ \Omega$ are connected in a circuit as shown in the figure. If the equivalent resistance between points A and B in the circuit is $X\ \Omega$, then the value of X is _____ Ω.

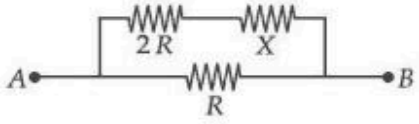

Options

1. R
2. $(\sqrt{3}-1)R$
3. $2(\sqrt{3}-1)R$
4. $(\sqrt{3}+1)R$

(A) R
(B) $(\sqrt{3}-1)R$
(C) $2(\sqrt{3}-1)R$
(D) $(\sqrt{3}+1)R$

Answer: (B) $(\sqrt{3}-1)R$ · Official NTA final key

Q26 JEE Main 2026 · 21 Jan · Shift 2 MCQ

A battery with EMF E and internal resistance r is connected across a resistance R. The power consumption in R will be maximum when :

(A) $R = r$
(B) $R = \frac{r}{2}$
(C) $R = \sqrt{2}\,r$
(D) $R = 2r$

Answer: (A) $R = r$ · Official NTA final key

Q27 JEE Main 2025 · 7 Apr · Shift 1 MCQ

A wire of resistance R is bent into a triangular pyramid as shown in figure with each segment having same length. The resistance between points A and B is R/n. The value of n is :

(see the figure above)

4. A wire of resistance R is bent into a triangular pyramid as shown in figure with each segment having same length. The resistance between points A and B is R/n. The value of n is :

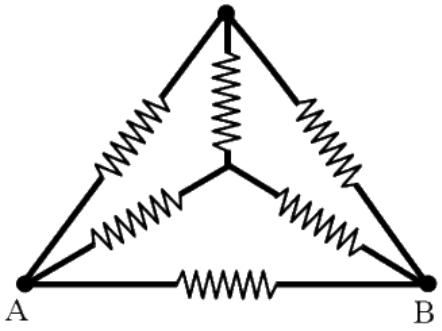

(1) 12 (2) 16 (3) 10 (4) 14

(A) 12
(B) 16
(C) 10
(D) 14

Answer: (A) 12 · Key from source paper

Q28 JEE Main 2025 · 4 Apr · Shift 1 MCQ

Current passing through a wire as function of time is given as $I(t) = 0.02t + 0.01A$. The charge that will flow through the wire from $t = 1s$ to $t = 2s$ is

(A) 0.06 C
(B) 0.02 C
(C) 0.04 C
(D) 0.07 C

Answer: (C) 0.04 C · Key from source paper

Q29 JEE Main 2025 · 4 Apr · Shift 2 MCQ

From the combination of resistors with resistances values $R_1 = R_2 = R_3 = 5\Omega$ and $R_4 = 10\Omega$, which of the following combination is the best circuit to get an equivalent resistance of 6Ω ?

17. From the combination of resistors with resistances values $R_1 = R_2 = R_3 = 5\Omega$ and $R_4 = 10\Omega$, which of the following combination is the best circuit to get an equivalent resistance of 6Ω ?

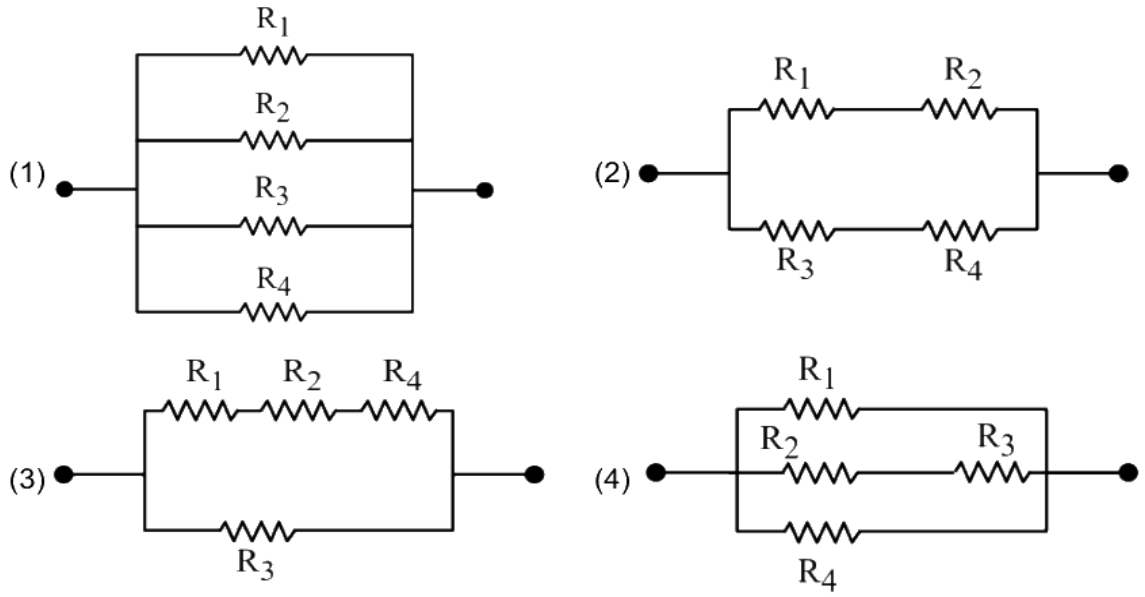

(A) *see figure*

(B) *see figure*

(C) *see figure*

(D) *see figure*

Answer: (B) · Key from source paper

Q30 JEE Main 2025 · 4 Apr · Shift 2 MCQ

There are 'n' number of identical electric bulbs, each is designed to draw a power p independently from the mains supply. They are now joined in series across the mains supply. The total power drawn by the combination is :

(A) $\frac{p}{n}$

(B) P

(C) $\frac{p}{n^2}$

(D) np

Answer: (A) $\frac{p}{n}$ · Key from source paper

Q31 JEE Main 2025 · 3 Apr · Shift 1 MCQ

A wire of length 25 m and cross-sectional area $5mm^2$ having resistivity of $2 \times 10^{-6}\Omega m$ is bent into a complete circle. The resistance between diametrically opposite points will be

(A) 12.5Ω
(B) 50Ω
(C) 100Ω
(D) 25Ω

Dropped by NTA. Full marks to everyone. · Key from source paper

Q32 JEE Main 2025 · 3 Apr · Shift 1 Numerical

In the figure shown below, a resistance of 150.4Ω is connected in series to an ammeter A of resistance 240Ω. A shunt resistance of 10Ω is connected in parallel with the ammeter. The reading of the ammeter is _____ mA .

(see the figure above)

22. In the figure shown below, a resistance of 150.4Ω is connected in series to an ammeter A of resistance 240Ω. A shunt resistance of 10Ω is connected in parallel with the ammeter. The reading of the ammeter is _____ mA .

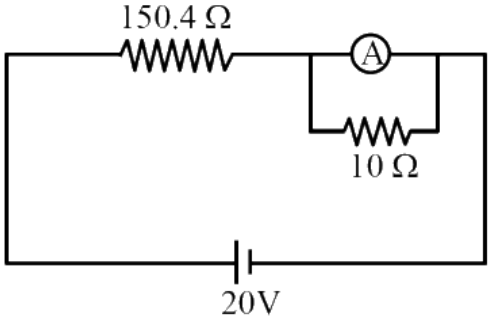

Numerical value type: the answer is a number.

Answer: 5. · Checked by our team

Q33 JEE Main 2025 · 3 Apr · Shift 2 MCQ

A motor operating on 100 V draws a current of 1 A. If the efficiency of the motor is 91.6%, then the loss of power in units of cal/s is

(A) 6.2
(B) 4
(C) 2
(D) 8.4

Answer: (C) 2 · Key from source paper

Q34 JEE Main 2025 · 3 Apr · Shift 2 Numerical

Two cells of emfs 1V and 2V and internal resistances 2Ω and 1Ω, respectively, are connected in series with an external resistance of 6Ω. The total current in the circuit is I_1. Now the same two cells in

parallel configuration are connected to same external resistance. In this case, the total current drawn is I_2. The value of $\left(\frac{I_1}{I_2}\right)$ is $\frac{x}{3}$. The value of x is _____ .

Numerical value type: the answer is a number.

Answer: 4. · Key from source paper

Q35 JEE Main 2025 · 2 Apr · Shift 1 MCQ

The battery of a mobile phone is rated as 4.2 V, 5800 mAh. How much energy is stored in it when fully charged?

(A) 87.7 kJ
(B) 24.4 kJ
(C) 43.8 kJ
(D) 48.7 kJ

Answer: (A) 87.7 kJ · Key from source paper

Q36 JEE Main 2025 · 28 Jan · Shift 1 MCQ

A wire of resistance R is bent into an equilateral triangle and an identical wire is bent into a square. The ratio of resistance between the two end points of an edge of the triangle to that of the square is Options

(A) 8/9
(B) 27/32
(C) 32/27
(D) 9/8

Answer: (C) 32/27 · Key from source paper

Q37 JEE Main 2025 · 28 Jan · Shift 1 MCQ

Find the equivalent resistance between two ends of the following circuit

(see the figure above)

Q40. Find the equivalent resistance between two ends of the following circuit

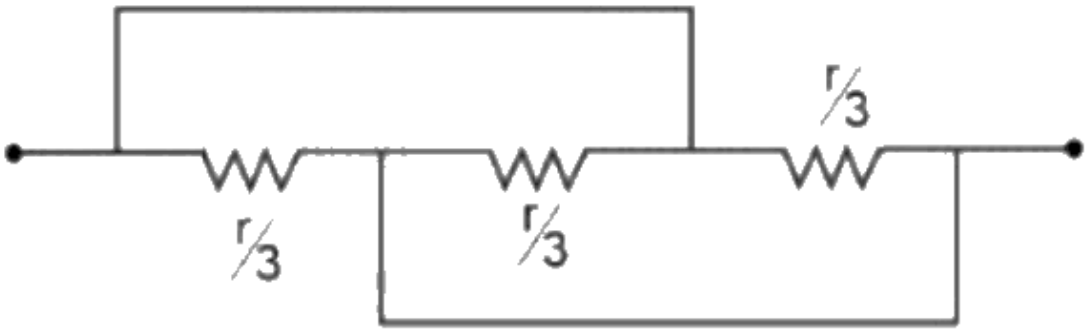

(1) $\frac{r}{9}$
(2) $\frac{r}{3}$
(3) r
(4) $\frac{r}{6}$

(A) $\frac{r}{9}$
(B) $\frac{r}{3}$
(C) r
(D) $\frac{r}{6}$

Answer: (A) $\frac{r}{9}$ · Key from source paper

Q38 JEE Main 2025 · 28 Jan · Shift 2 Numerical

The value of current I in the electrical circuit as given below, when potential at A is equal to the potential at B, will be _____ A.

(see the figure above)

Q47. The value of current I in the electrical circuit as given below, when potential at A is equal to the potential at B,

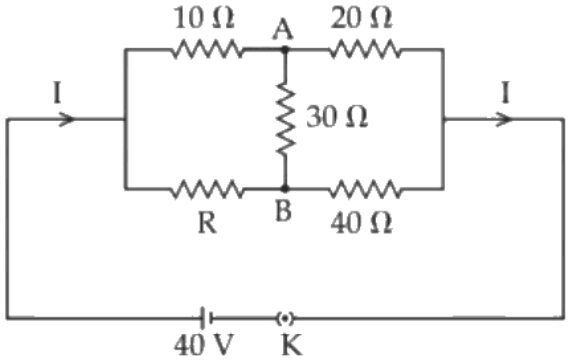

will be ____ A.

Numerical value type: the answer is a number.

Answer: 2. · Key from source paper

Q39 JEE Main 2025 · 24 Jan · Shift 1 Numerical

A wire of resistance 9Ω is bent to form an equilateral triangle. Then the equivalent resistance across any two vertices will be _____ ohm.

Numerical value type: the answer is a number.

Answer: 2. · Key from source paper

Q40 JEE Main 2025 · 23 Jan · Shift 2 MCQ

A galvanometer having a coil of resistance 30Ω need 20 mA of current for full-scale deflection. If a maximum current of 3 A is to be measured using this galvanometer, the resistance of the shunt to be added to the galvanometer should be $\frac{30}{X}\ \Omega$, where X is Options

(A) 596
(B) 149
(C) 298
(D) 447

Answer: (B) 149 · Key from source paper

Q41 JEE Main 2025 · 22 Jan · Shift 1 MCQ

Given below are two statements : Statement-I : The equivalent emf of two nonideal batteries connected in parallel is smaller than either of the two emfs. Statement-II : The equivalent internal resistance of two nonideal batteries connected in parallel is smaller than the internal resistance of either of the two batteries. In the light of the above statements, choose the correct answer from the options given below.

(A) Both Statement-I and Statement-II are false
(B) Statement-I is false but Statement-II is true
(C) Both Statement-I and Statement-II are true
(D) Statement-I is true but Statement-II is false

Answer: (B) Statement-I is false but Statement-II is true · Key from source paper

Q42 JEE Main 2025 · 22 Jan · Shift 1 MCQ

see figure

Q34.

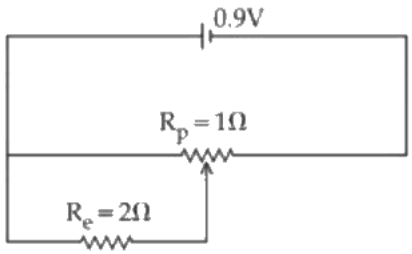

Sliding contact of a potentiometer is in the middle of the potentiometer wire having resistance $R_p = 1\Omega$ as shown in the figure. An external resistance of $R_e = 2\Omega$ is connected via the sliding contact. The electric current in the circuit is :

(1) 0.9 A
(2) 1.35 A
(3) 0.3 A
(4) 1.0 A

(A) 0.9 A
(B) 1.35 A
(C) 0.3 A
(D) 1.0 A

Answer: (D) 1.0 A · Key from source paper

Q43 JEE Main 2025 · 22 Jan · Shift 1 MCQ

Which of the following resistivity (ρ) v/s temperature (T) curves is most suitable to be used in wire bound standard resistors?

Q45. Which of the following resistivity (ρ) v/s temperature (T) curves is most suitable to be used in wire bound standard resistors?

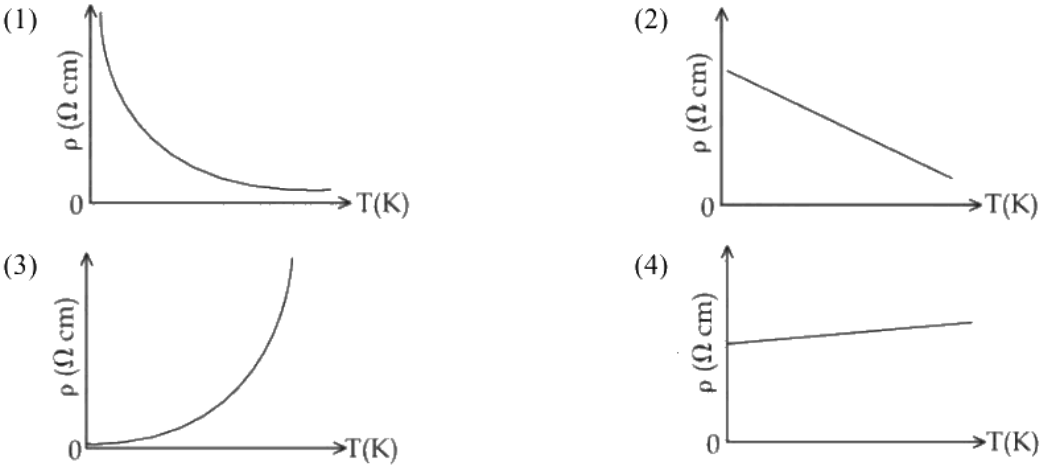

(A) *see figure*
(B) *see figure*
(C) *see figure*
(D) *see figure*

Answer: (D) · Key from source paper

Q44 JEE Main 2025 · 22 Jan · Shift 2 Numerical

The net current flowing in the given circuit is _____ A.

(see the figure above)

Q47. The net current flowing in the given circuit is_____ A.

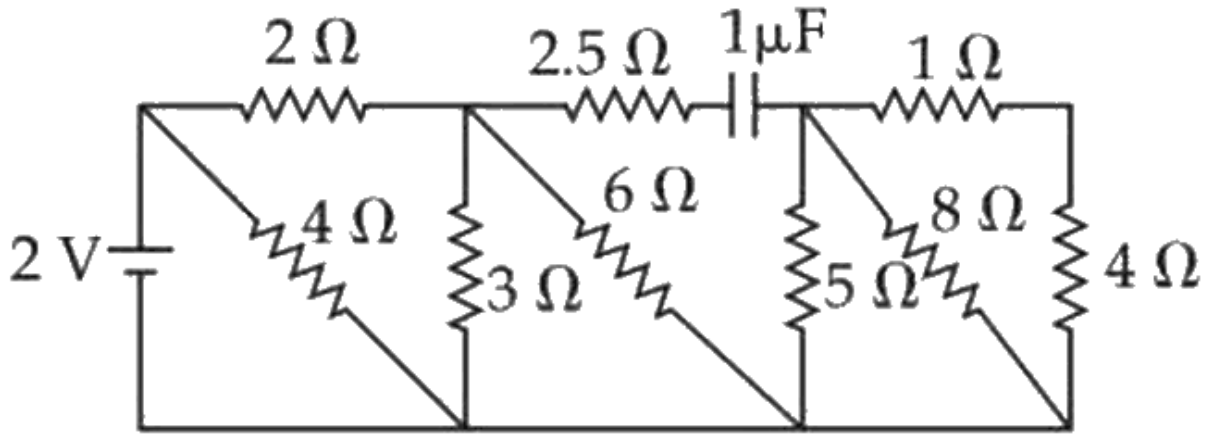

Numerical value type: the answer is a number.

Answer: 1. · Key from source paper

Q45 JEE Main 2024 · 9 Apr · Shift 1 MCQ

A galvanometer has a coil of resistance 200Ω with a full scale deflection at 20μA. The value of resistance to be added to use it as an ammeter of range (0 − 20)mA is ;

(A) 0.40Ω
(B) 0.20Ω
(C) 0.50Ω
(D) 0.10Ω

Answer: (B) 0.20Ω · Key from source paper

Q46 JEE Main 2024 · 9 Apr · Shift 1 MCQ

see figure

Q13.

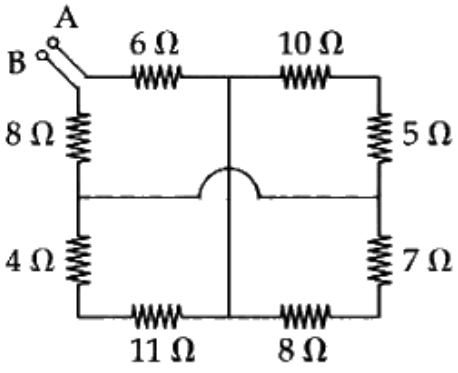

The equivalent resistance between A and B is :

(1) 18Ω
(2) 19Ω
(3) 25Ω
(4) 27Ω

(A) 18Ω
(B) 19Ω
(C) 25Ω
(D) 27Ω

Answer: (B) 19Ω · Key from source paper

Q47 JEE Main 2024 · 9 Apr · Shift 1 Numerical

The current flowing through the 1Ω resistor is $\frac{n}{10}$ A. The value of n is _____

(see the figure above)

Q26. The current flowing through the 1Ω resistor is $\frac{n}{10}$ A. The value of n is _____

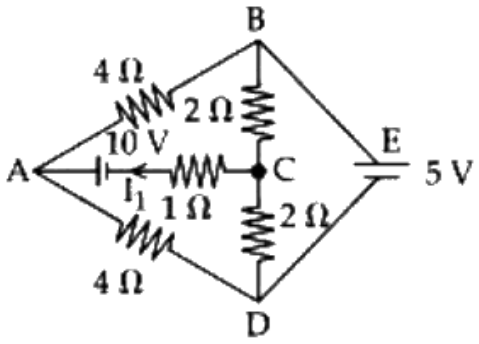

Numerical value type: the answer is a number.

Answer: 25. · Key from source paper

Q48 JEE Main 2024 · 9 Apr · Shift 2 MCQ

The effective resistance between A and B, if resistance of each resistor is R, will be

(see the figure above)

Q10. The effective resistance between A and B, if resistance of each resistor is R, will be

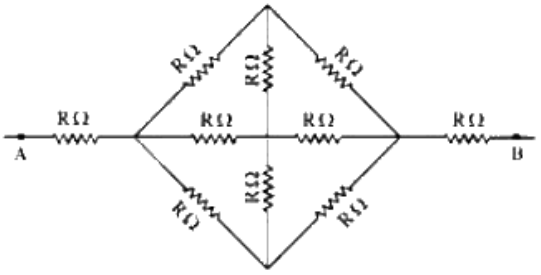

(1) $\frac{8R}{3}$
(2) $\frac{5R}{3}$
(3) $\frac{4R}{3}$
(4) $\frac{2}{3}R$

(A) $\frac{8R}{3}$
(B) $\frac{5R}{3}$
(C) $\frac{4R}{3}$
(D) $\frac{2}{3}R$

Answer: (A) $\frac{8R}{3}$ · Key from source paper

Q49 JEE Main 2024 · 9 Apr · Shift 2 Numerical

At room temperature (27°C), the resistance of a heating element is 50Ω. The temperature coefficient of the material is $2.4 \times 10^{-4}\,^{\circ}\mathrm{C}^{-1}$. The temperature of the element, when its resistance is 62Ω, is _____ °C.

Numerical value type: the answer is a number.

Answer: 1027. · Key from source paper

Q50 JEE Main 2024 · 9 Apr · Shift 2 Numerical

To determine the resistance (R) of a wire, a circuit is designed below. The $V - I$ characteristic curve for this circuit is plotted for the voltmeter and the ammeter readings as shown in figure. The value of R is _____ Ω.

(see the figure above)

Q27. To determine the resistance (R) of a wire, a circuit is designed below. The $V - I$ characteristic curve for this circuit is plotted for the voltmeter and the ammeter readings as shown in figure. The value of R is _____ Ω.

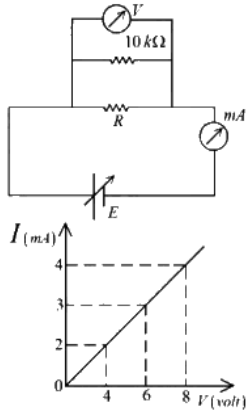

Numerical value type: the answer is a number.

Answer: 2500. · Key from source paper

Q51 JEE Main 2024 · 8 Apr · Shift 1 MCQ

In the given circuit, the terminal potential difference of the cell is :

(see the figure above)

Q12. In the given circuit, the terminal potential difference of the cell is :

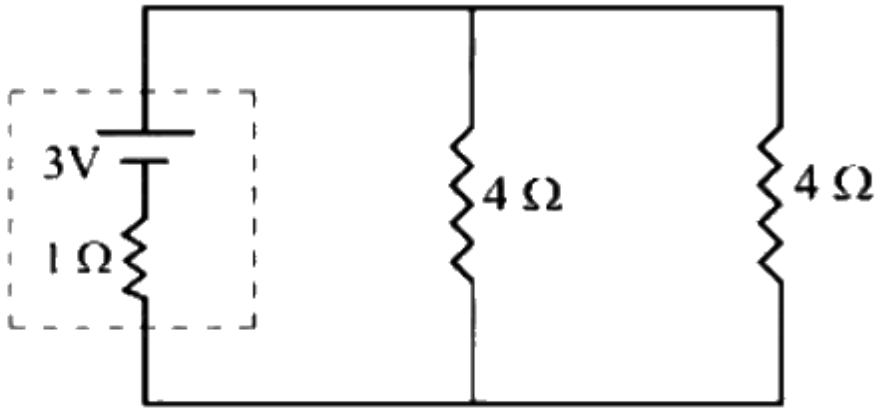

(1) 2 V
(2) 3 V
(3) 4 V
(4) 1.5 V

(A) 2 V
(B) 3 V
(C) 4 V
(D) 1.5 V

Answer: (A) 2 V · Key from source paper

Q52 JEE Main 2024 · 8 Apr · Shift 1 · Numerical

Resistance of a wire at $0^{\circ}C$, $100^{\circ}C$ and $t^{\circ}C$ is found to be 10Ω, 10.2Ω and 10.95Ω respectively. The temperature t in Kelvin scale is _____

Numerical value type: the answer is a number.

Answer: 748. · Key from source paper

Q53 JEE Main 2024 · 8 Apr · Shift 2 · MCQ

Water boils in an electric kettle in 20 minutes after being switched on. Using the same main supply, the length of the heating element should be _____ to _____ times of its initial length if the water is to be boiled in 15 minutes.

(A) decreased, 3/4
(B) increased, 4/3
(C) decreased, 4/3
(D) increased, 3/4

Answer: (A) decreased, 3/4 · Key from source paper

Q54 JEE Main 2024 · 8 Apr · Shift 2 Numerical

A heater is designed to operate with a power of 1000 W in a 100 V line. It is connected in combination with a resistance of 10Ω and a resistance R, to a 100 V mains as shown in figure. For the heater to operate at 62.5 W, the value of R should be _____ Ω.

(see the figure above)

Q26. A heater is designed to operate with a power of 1000 W in a 100 V line. It is connected in combination with a resistance of 10Ω and a resistance R, to a 100 V mains as shown in figure. For the heater to operate at 62.5 W,

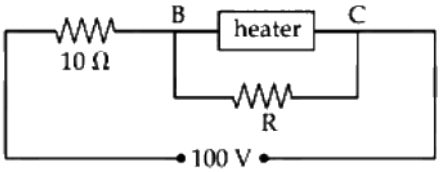

the value of R should be _____Ω.

Numerical value type: the answer is a number.

Answer: 5. · Key from source paper

Q55 JEE Main 2024 · 6 Apr · Shift 1 MCQ

The value of unknown resistance (x) for which the potential difference between B and D will be zero in the arrangement shown, is :

(see the figure above)

Q12. The value of unknown resistance (x) for which the potential difference between B and D will be zero in the

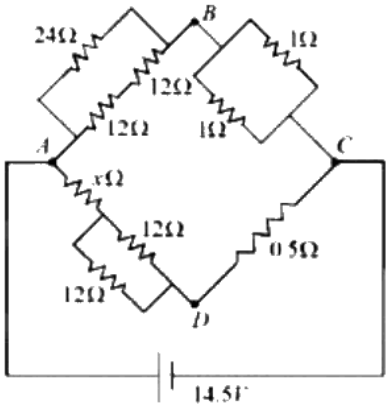

arrangement shown, is :

(1) 3Ω (2) 42Ω

(3) 9Ω (4) 6Ω

(A) 3Ω

(B) 42Ω

(C) 9Ω

(D) 6Ω

Answer: (D) 6Ω · Key from source paper

Q56 JEE Main 2024 · 6 Apr · Shift 1 · Numerical

A wire of resistance R and radius r is stretched till its radius became $r/2$. If new resistance of the stretched wire is xR, then value of x is _____

Numerical value type: the answer is a number.

Answer: 16. · Key from source paper

Q57 JEE Main 2024 · 6 Apr · Shift 2 · MCQ

The number of electrons flowing per second in the filament of a 110 W bulb operating at 220 V is : (Given e = 1.6×10^{-19}C)

(A) 6.25×10^{17}

(B) 1.25×10^{19}

(C) 6.25×10^{18}

(D) 31.25×10^{17}

Answer: (D) 31.25×10^{17} · Key from source paper

Q58 JEE Main 2024 · 6 Apr · Shift 2 · Numerical

In the given figure an ammeter A consists of a 240Ω coil connected in parallel to a 10Ω shunt. The reading of the ammeter is _____ mA

(see the figure above)

Q26. In the given figure an ammeter A consists of a 240Ω coil connected in parallel to a 10Ω shunt. The reading of

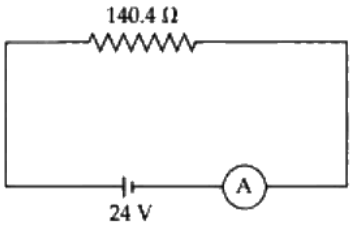

the ammeter is mA

Numerical value type: the answer is a number.

Answer: 160. · Key from source paper

Q59 JEE Main 2024 · 5 Apr · Shift 1 · MCQ

In the given figure $R_1 = 10\Omega$, $R_2 = 8\Omega$, $R_3 = 4\Omega$ and $R_4 = 8\Omega$. Battery is ideal with emf 12 V. Equivalent resistant of the circuit and current supplied by battery are respectively :

(see the figure above)

Q13. In the given figure $R_1 = 10\Omega, R_2 = 8\Omega, R_3 = 4\Omega$ and $R_4 = 8\Omega$. Battery is ideal with emf 12 V. Equivalent resistant of the circuit and current supplied by battery are respectively :

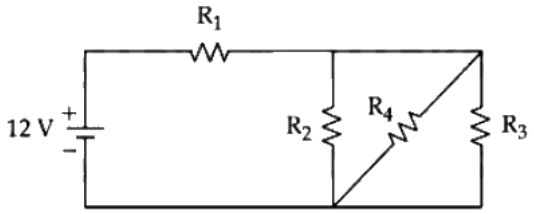

(1) 10.5Ω and 1.14 A
(2) 12Ω and 1 A
(3) 10.5Ω and 1 A
(4) 12Ω and 11.4 A

(A) 10.5Ω and 1.14 A
(B) 12Ω and 1 A
(C) 10.5Ω and 1 A
(D) 12Ω and 11.4 A

Answer: (B) 12Ω and 1 A · Key from source paper

Q60 JEE Main 2024 · 5 Apr · Shift 2 MCQ

A galvanometer of resistance $100\,\Omega$ when connected in series with $400\,\Omega$ measures a voltage of upto 10 V. The value of resistance required to convert the galvanometer into ammeter to read upto 10 A is $x \times 10^{-2}\,\Omega$. The value of x is :

(A) 2
(B) 800
(C) 20
(D) 200

Answer: (C) 20 · Key from source paper

Q61 JEE Main 2024 · 5 Apr · Shift 2 MCQ

The ratio of heat dissipated per second through the resistance $5\,\Omega$ and $10\,\Omega$ in the circuit given below is :

(see the figure above)

Q12. The ratio of heat dissipated per second through the resistance 5Ω and 10Ω in the circuit given below is :

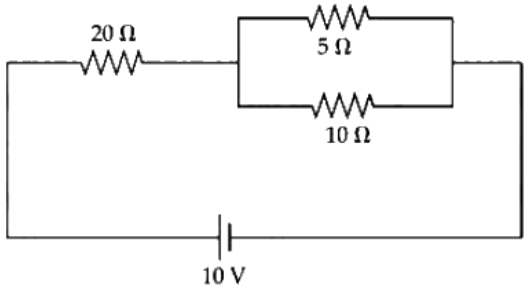

(1) 1 : 2
(2) 2 : 1
(3) 4 : 1
(4) 1 : 1

(A) 1 : 2
(B) 2 : 1
(C) 4 : 1
(D) 1 : 1

Answer: (B) 2 : 1 · Key from source paper

Q62 JEE Main 2024 · 5 Apr · Shift 2 Numerical

A wire of resistance $20\,\Omega$ is divided into 10 equal parts, resulting pairs. A combination of two parts are connected in parallel and so on. Now resulting pairs of parallel combination are connected in series. The equivalent resistance of final combination is _____ Ω.

Numerical value type: the answer is a number.

Answer: 5. · Key from source paper

Q63 JEE Main 2024 · 4 Apr · Shift 1 MCQ

The resistances of the platinum wire of a platinum resistance thermometer at the ice point and steam point are 8Ω and 10Ω respectively. After inserting in a hot bath of temperature 400°C, the resistance of platinum wire is :

(A) 10Ω
(B) 8Ω
(C) 16Ω
(D) 2Ω

Answer: (C) 16Ω · Key from source paper

Q64 JEE Main 2024 · 4 Apr · Shift 1 MCQ

To measure the internal resistance of a battery, potentiometer is used. For R = 10Ω, the balance point is observed at l = 500 cm and for R = 1Ω the balance point is observed at l = 400 cm. The internal resistance of the battery is approximately :

(A) 0.2Ω
(B) 0.3Ω
(C) 0.4Ω
(D) 0.1Ω

Answer: (B) 0.3Ω · Key from source paper

Q65 JEE Main 2024 · 4 Apr · Shift 1 Numerical

Twelve wires each having resistance 2Ω are joined to form a cube. A battery of 6 V emf is joined across point

(see the figure above)

a and c. The voltage difference between e and f is _____ V.

Q26. Twelve wires each having resistance 2Ω are joined to form a cube. A battery of 6 V emf is joined across point

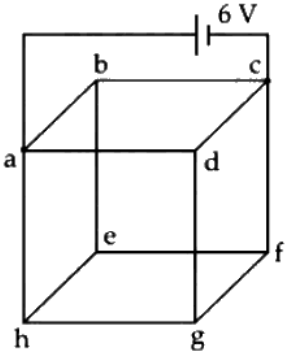

a and c. The voltage difference between e and f is _____V.

Numerical value type: the answer is a number.

Answer: 1. · Key from source paper

Q66 JEE Main 2024 · 4 Apr · Shift 2 MCQ

An electric bulb rated 50 W – 200 V is connected across a 100 V supply. The power dissipation of the bulb is:

(A) 25 W
(B) 12.5 W
(C) 50 W
(D) 100 W

Answer: (B) 12.5 W · Key from source paper

Q67 JEE Main 2024 · 4 Apr · Shift 2 Numerical

Two wires A and B are made up of the same material and have the same mass. Wire A has radius of 2.0 mm and wire B has radius of 4.0 mm. The resistance of wire B is 2Ω. The resistance of wire A is _____ Ω.

Numerical value type: the answer is a number.

Answer: 32. · Key from source paper

Q68 JEE Main 2024 · 1 Feb · Shift 1 MCQ

The reading in the ideal voltmeter V shown in the given circuit diagram is:

(see the figure above)

Q12. The reading in the ideal voltmeter V shown in the given circuit diagram is:

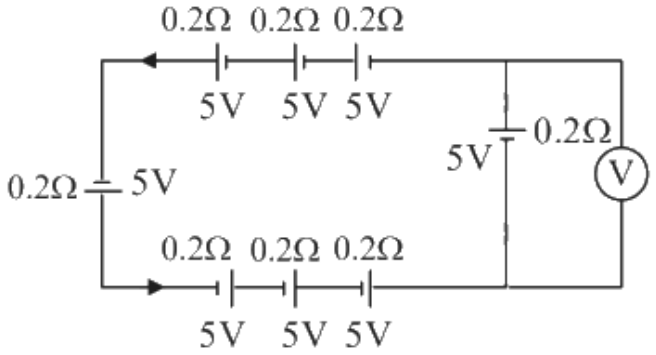

(1) 5 V
(2) 10 V
(3) 0 V
(4) 3 V

(A) 5 V
(B) 10 V
(C) 0 V
(D) 3 V

Answer: (C) 0 V · Key from source paper

Q69 JEE Main 2024 · 1 Feb · Shift 1 MCQ

A galvanometer has a resistance of 50 Ω and it allows maximum current of 5 mA. It can be converted into voltmeter to measure upto 100 V by connecting in series a resistor of resistance.

(A) 5975 Ω
(B) 20050 Ω
(C) 19950 Ω
(D) 19500 Ω

Answer: (C) 19950 Ω · Key from source paper

Q70 JEE Main 2024 · 1 Feb · Shift 1 Numerical

The current in a conductor is expressed as $I = 3t^2 + 4t^3$, where I is in Ampere and t is in second. The amount of electric charge that flows through a section of the conductor during $t = 1$ s to $t = 2$ s is _____ C.

Numerical value type: the answer is a number.

Answer: 22. · Key from source paper

Q71 JEE Main 2024 · 1 Feb · Shift 2 MCQ

In a metre-bridge when a resistance in the left gap is 2 Ω and unknown resistance in the right gap, the balance length is found to be 40 cm. On shunting the unknown resistance with 2 Ω, the balance length changes by:

(A) 22.5 cm
(B) 20 cm
(C) 62.5 cm
(D) 65 cm

Answer: (A) 22.5 cm · Key from source paper

Q72 JEE Main 2024 · 1 Feb · Shift 2 MCQ

In an ammeter, 5% of the main current passes through the galvanometer. If resistance of the galvanometer is G, the resistance of ammeter will be:

(A) $\frac{G}{20}$
(B) $\frac{G}{199}$
(C) 199 G
(D) 200 G

Answer: (A) $\frac{G}{20}$ · Key from source paper

Q73 JEE Main 2024 · 1 Feb · Shift 2 MCQ

To measure the temperature coefficient of resistivity α of a semiconductor, an electrical arrangement shown in the figure is prepared. The arm BC is made up of the semiconductor. The experiment is being conducted at 25°C and resistance of the semiconductor arm is 3 mΩ. Arm BC is cooled at a constant rate of 2 $^{\circ}\mathrm{C\ s^{-1}}$. If the galvanometer G shows no deflection after 10 s, then α is:

(see the figure above)

Q14. To measure the temperature coefficient of resistivity α of a semiconductor, an electrical arrangement shown in the figure is prepared. The arm BC is made up of the semiconductor. The experiment is being conducted at 25°C and resistance of the semiconductor arm is 3 mΩ. Arm BC is cooled at a constant rate of 2 °C s^{-1}. If the galvanometer G shows no deflection after 10 s, then α is:

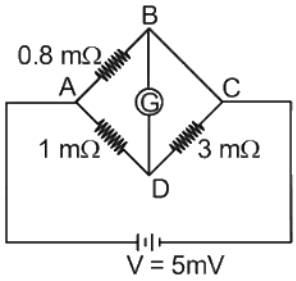

(1) -2×10^{-2} °C^{-1}
(2) -1.5×10^{-2} °C^{-1}
(3) -1×10^{-2} °C^{-1}
(4) -2.5×10^{-2} °C^{-1}

(A) $-2 \times 10^{-2}\ ^{\circ}\mathrm{C}^{-1}$
(B) $-1.5 \times 10^{-2}\ ^{\circ}\mathrm{C}^{-1}$
(C) $-1 \times 10^{-2}\ ^{\circ}\mathrm{C}^{-1}$
(D) $-2.5 \times 10^{-2}\ ^{\circ}\mathrm{C}^{-1}$

Answer: (C) $-1 \times 10^{-2}\ ^{\circ}\mathrm{C}^{-1}$ · Key from source paper

---

Q74 JEE Main 2024 · 31 Jan · Shift 1 MCQ

Two conductors have the same resistances at 0 °C but their temperature coefficients of resistance are α_1 and α_2. The respective temperature coefficients for their series and parallel combinations are :

(A) $\alpha_1 + \alpha_2,\ \frac{\alpha_1+\alpha_2}{2}$
(B) $\frac{\alpha_1+\alpha_2}{2},\ \frac{\alpha_1+\alpha_2}{2}$
(C) $\alpha_1 + \alpha_2,\ \frac{\alpha_1\alpha_2}{\alpha_1+\alpha_2}$
(D) $\frac{\alpha_1+\alpha_2}{2},\ \alpha_1 + \alpha_2$

Answer: (B) $\frac{\alpha_1+\alpha_2}{2},\ \frac{\alpha_1+\alpha_2}{2}$ · Key from source paper

---

Q75 JEE Main 2024 · 31 Jan · Shift 1 Numerical

Equivalent resistance of the following network is _____ Ω.

(see the figure above)

Q26. Equivalent resistance of the following network is _____ Ω.

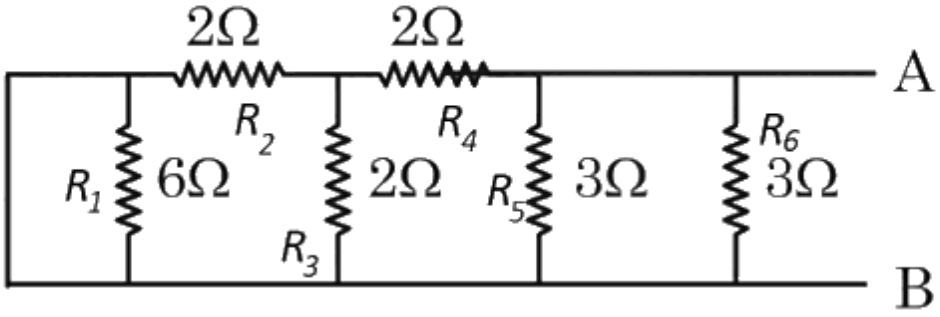

Numerical value type: the answer is a number.

Answer: 1. · Key from source paper

Q76 JEE Main 2024 · 31 Jan · Shift 2 MCQ

By what percentage will the illumination of the lamp decrease if the current drops by 20%?

(A) 46%
(B) 26%
(C) 36%
(D) 56%

Answer: (C) 36% · Key from source paper

Q77 JEE Main 2024 · 31 Jan · Shift 2 MCQ

The resistance per centimeter of a meter bridge wire is r, with $X\ \Omega$ resistance in left gap. Balancing length from left end is at 40 cm with $25\ \Omega$ resistance in right gap. Now the wire is replaced by another wire of $2r$ resistance per centimeter. The new balancing length for same settings will be at

(A) 20 cm
(B) 10 cm
(C) 80 cm
(D) 40 cm

Answer: (D) 40 cm · Key from source paper

Q78 JEE Main 2024 · 31 Jan · Shift 2 Numerical

In the following circuit, the battery has an emf of 2 V and an internal resistance of $\frac{2}{3}\ \Omega$. The power consumption in the entire circuit is _____ W.

(see the figure above)

EdLoop JEE

Q26. In the following circuit, the battery has an emf of 2 V and an internal resistance of $\frac{2}{3}$ Ω. The power consumption in the entire circuit is _____ W.

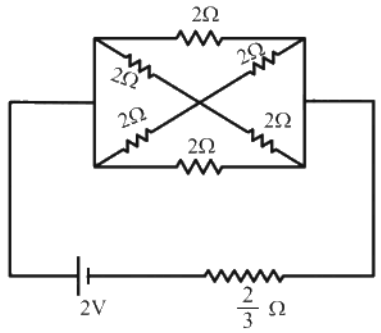

Numerical value type: the answer is a number.

Answer: 3. · Key from source paper

Q79 JEE Main 2024 · 30 Jan · Shift 1 MCQ

A potential divider circuit is shown in figure. The output voltage V_0 is

(see the figure above)

Q11. A potential divider circuit is shown in figure. The output voltage V_0 is

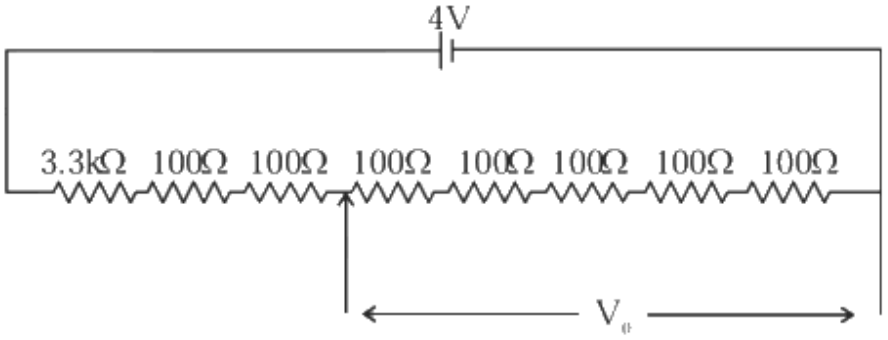

(1) 4 V
(2) 2 mV
(3) 0.5 V
(4) 12 mV

(A) 4 V
(B) 2 mV
(C) 0.5 V
(D) 12 mV

Answer: (C) 0.5 V · Key from source paper

Q80 JEE Main 2024 · 30 Jan · Shift 1 MCQ

An electric toaster has resistance of 60 Ω at room temperature (27°C). The toaster is connected to a 220 V supply. If the current flowing through it reaches 2. 75 A, the temperature attained by toaster is around: (if $\alpha = 2 \times 10^{-4}\ ^{\circ}\mathrm{C}^{-1}$)

(A) $694^\circ C$
(B) $1235^\circ C$
(C) $1694^\circ C$
(D) $1667^\circ C$

Answer: (C) $1694^\circ C$ · Key from source paper

Q81 JEE Main 2024 · 30 Jan · Shift 1 Numerical

Two cells are connected in opposition as shown. Cell E_1 is of 8 V emf and 2 Ω internal resistance; the cell E_2 is of 2 V emf and 4 Ω internal resistance. The terminal potential difference of cell E_2 is _____ V.

(see the figure above)

Q26. Two cells are connected in opposition as shown. Cell E_1 is of 8 V emf and 2 Ω internal resistance; the cell E_2 is of 2 V emf and 4 Ω internal resistance. The terminal potential difference of cell E_2 is _____ V.

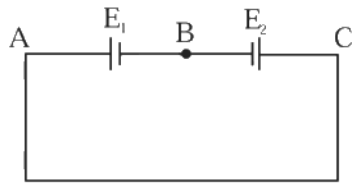

Numerical value type: the answer is a number.

Answer: 6. · Key from source paper

Q82 JEE Main 2024 · 30 Jan · Shift 2 MCQ

When a potential difference V is applied across a wire of resistance R, it dissipates energy at a rate W. If the wire is cut into two halves and these halves are connected mutually parallel across the same supply, the energy dissipation rate will become:

(A) $\frac{1}{4}$ W
(B) $\frac{1}{2}$ W
(C) 2 W
(D) 4 W

Answer: (D) 4 W · Key from source paper

Q83 JEE Main 2024 · 30 Jan · Shift 2 Numerical

Two resistance of $100\,\Omega$ and $200\,\Omega$ are connected in series with a battery of 4 V and negligible internal resistance. A voltmeter is used to measure voltage across $100\,\Omega$ resistance, which gives reading as 1 V. The resistance of voltmeter must be _____ Ω.

Numerical value type: the answer is a number.

Answer: 200. · Key from source paper

Q84 JEE Main 2024 · 29 Jan · Shift 1 MCQ

The electric current through a wire varies with time as $I = I_0 + \beta t$, where $I_0 = 20$ A and $\beta = 3$ A s^{-1}. The amount of electric charge crossed through a section of the wire in 20 s is:

(A) 80 C
(B) 1000 C
(C) 800 C
(D) 1600 C

Answer: (B) 1000 C · Key from source paper

Q85 JEE Main 2024 · 29 Jan · Shift 1 MCQ

A galvanometer having coil resistance 10 Ω shows a full scale deflection for a current of 3 mA. For it to measure a current of 8 A, the value of the shunt should be:

(A) $3 \times 10^{-3}\,\Omega$
(B) $4.85 \times 10^{-3}\,\Omega$
(C) $3.75 \times 10^{-3}\,\Omega$
(D) $2.75 \times 10^{-3}\,\Omega$

Answer: (C) $3.75 \times 10^{-3}\,\Omega$ · Key from source paper

Q86 JEE Main 2024 · 29 Jan · Shift 1 MCQ

The deflection in moving coil galvanometer falls from 25 divisions to 5 division when a shunt of 24 Ω is applied. The resistance of galvanometer coil will be:

(A) 12 Ω
(B) 96 Ω
(C) 48 Ω
(D) 100 Ω

Answer: (B) 96 Ω · Key from source paper

Q87 JEE Main 2024 · 29 Jan · Shift 2 MCQ

In the given circuit, the current in resistance R_3 is:

(see the figure above)

EdLoop JEE

Q12. In the given circuit, the current in resistance R_3 is:

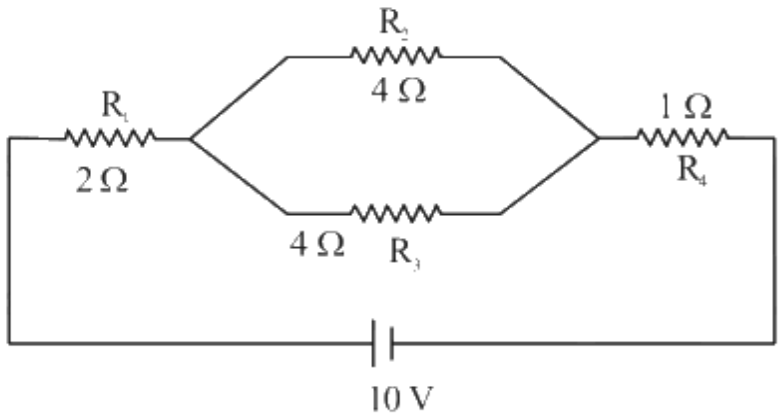

(1) 1 A
(2) 1.5 A
(3) 2 A
(4) 2.5 A

(A) 1 A
(B) 1.5 A
(C) 2 A
(D) 2.5 A

Answer: (A) 1 A · Key from source paper

Q88 JEE Main 2024 · 29 Jan · Shift 2 Numerical

In the given circuit, the current flowing through the resistance 20 Ω is 0.3 A, while the ammeter reads 0.9 A. The value of R_1 is _____ Ω.

(see the figure above)

Q25. In the given circuit, the current flowing through the resistance 20 Ω is 0.3 A, while the ammeter reads 0.9 A. The value of R_1 is _____Ω.

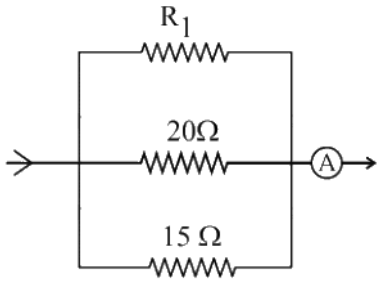

Numerical value type: the answer is a number.

Answer: 30. · Key from source paper

Q89 JEE Main 2024 · 27 Jan · Shift 1 MCQ

A wire of resistance R and length L is cut into 5 equal parts. If these parts are joined parallelly, then resultant resistance will be :

(A) $\frac{R}{25}$
(B) $\frac{R}{5}$
(C) $25R$
(D) $5R$

Answer: (A) $\frac{R}{25}$ · Key from source paper

Q90 JEE Main 2024 · 27 Jan · Shift 1 MCQ

A wire of length 10 cm and radius $\sqrt{7} \times 10^{-4}$ m connected across the right gap of a meter bridge. When a resistance of 4.5 Ω is connected on the left gap by using a resistance box, the balance length is found to be at 60 cm from the left end. If the resistivity of the wire is R $\times 10^{-7}$ Ω m, then value of R is :

(A) 63
(B) 70
(C) 66
(D) 35

Answer: (C) 66 · Key from source paper

Q91 JEE Main 2024 · 27 Jan · Shift 2 MCQ

Wheatstone bridge principle is used to measure the specific resistance S_1 of given wire, having length L, radius r. If X is the resistance of wire, then specific resistance is : $S_1 = X\frac{\pi r^2}{L}$. If the length of the wire gets doubled then the value of specific resistance will be :

(A) $\frac{S_1}{4}$
(B) 2 S_1
(C) $\frac{S_1}{2}$
(D) S_1

Answer: (D) S_1 · Key from source paper

Q92 JEE Main 2024 · 27 Jan · Shift 2 MCQ

Three voltmeters, all having different internal resistances are joined as shown in figure. When some potential difference is applied across A and B, their readings are V_1, V_2 and V_3. Choose the correct option.

(see the figure above)

EdLoop JEE

Q13. Three voltmeters, all having different internal resistances are joined as shown in figure. When some potential difference is applied across A and B, their readings are V_1, V_2 and V_3. Choose the correct option.

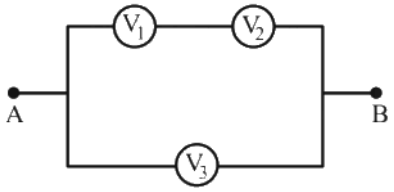

(1) $V_1 = V_2$
(2) $V_1 \neq V_3 - V_2$
(3) $V_1 + V_2 > V_3$
(4) $V_1 + V_2 = V_3$

(A) $V_1 = V_2$
(B) $V_1 \neq V_3 - V_2$
(C) $V_1 + V_2 > V_3$
(D) $V_1 + V_2 = V_3$

Answer: (D) $V_1 + V_2 = V_3$ · Key from source paper

Q93 JEE Main 2023 · 15 Apr · Shift 1 MCQ

For designing a voltmeter of range 50 V and an ammeter of range 10 mA using a galvanometer which has a coil of resistance 54 Ω showing a full scale deflection for 1 mA as in figure.

(see the figure above)

(A) for voltmeter $R \approx 50$ kΩ
(B) for ammeter $r \approx 0.2\ \Omega$
(C) for ammeter $r \approx 6\ \Omega$
(D) for voltmeter $R \approx 5$ kΩ
(E) for voltmeter $R \approx 500\ \Omega$
Choose the correct answer from the options given below:

Q12. For designing a voltmeter of range 50 V and an ammeter of range 10 mA using a galvanometer which has a coil of resistance 54 Ω showing a full scale deflection for 1 mA as in figure.

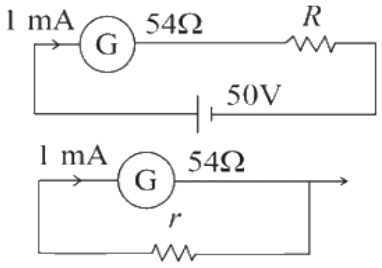

(A) for voltmeter $R \approx 50\ \text{k}\Omega$
(B) for ammeter $r \approx 0.2\ \Omega$
(C) for ammeter $r \approx 6\ \Omega$
(D) for voltmeter $R \approx 5\ \text{k}\Omega$
(E) for voltmeter $R \approx 500\ \Omega$
Choose the correct answer from the options given below:
(1) (A) and (C)
(2) (C) and (E)
(3) (C) and (D)
(4) (A) and (B)

A (A) and (C)
B (C) and (E)
C (C) and (D)
D (A) and (B)

Answer: (A) (A) and (C) · Key from source paper

Q94 JEE Main 2023 · 15 Apr · Shift 1 MCQ

Given below are two statements:
Statement I : The equivalent resistance of resistors in a series combination is smaller than least resistance used in the combination.
Statement II : The resistivity of the material is independent of temperature. In the light of the above statements, choose the correct answer from the options given below:

A Both Statement I and Statement II are false
B Both Statement I and Statement II are true
C Statement I is true but Statement II is false
D Statement I is false but Statement II is true

Answer: (A) Both Statement I and Statement II are false · Key from source paper

Q95 JEE Main 2023 · 15 Apr · Shift 1 Numerical

A network of four resistances is connected to 9 V battery, as shown in figure. The magnitude of voltage difference between the points A and B is _____ V.

(see the figure above)

Q26. A network of four resistances is connected to 9 V battery, as shown in figure. The magnitude of voltage difference between the points A and B is _____ V.

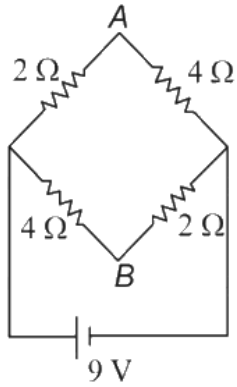

Numerical value type: the answer is a number.

Answer: 3. · Key from source paper

Q96 JEE Main 2023 · 13 Apr · Shift 1 MCQ

Different combination of 3 resistors of equal resistance R are shown in the figures. The increasing order for power dissipation is:

(see the figure above)

Q17. Different combination of 3 resistors of equal resistance R are shown in the figures. The increasing order for power dissipation is:

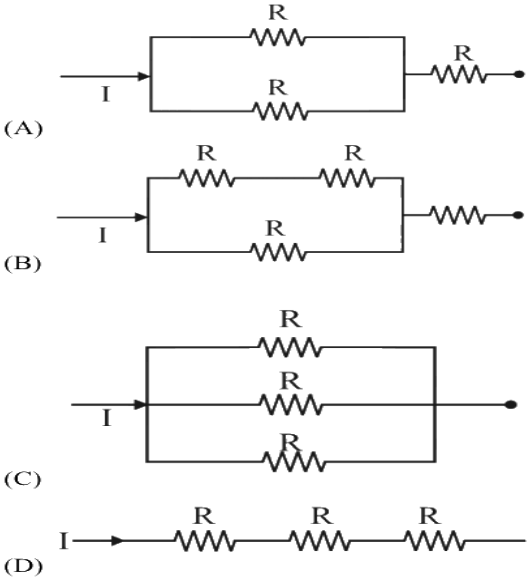

(1) $P_B < P_C < P_D < P_A$
(2) $P_C < P_D < P_A < P_B$
(3) $P_C < P_B < P_A < P_D$
(4) $P_A < P_B < P_C < P_D$

(A) $P_B < P_C < P_D < P_A$
(B) $P_C < P_D < P_A < P_B$
(C) $P_C < P_B < P_A < P_D$
(D) $P_A < P_B < P_C < P_D$

Answer: (C) $P_C < P_B < P_A < P_D$ · Key from source paper

Q97 JEE Main 2023 · 13 Apr · Shift 1 Numerical

A potential V_0 is applied across a uniform wire of resistance R. The power dissipation is P_1. The wire is then cut into two equal halves and a potential of V_0 is applied across the length of each half. The total power dissipation across two wires is P_2. The ratio of $P_2 : P_1$ is $\sqrt{x} : 1$. The value of x is _____.

Numerical value type: the answer is a number.

Answer: 16. · Key from source paper

Q98 JEE Main 2023 · 13 Apr · Shift 1 Numerical

When a resistance of 5 Ω is shunted with a moving coil galvanometer, it shows a full scale deflection for current of 250 mA, however when 1050 Ω resistance is connected with it in series, it gives full scale deflection for 25 volt. The resistance of galvanometer is _____ Ω.

Numerical value type: the answer is a number.

Answer: 50. · Key from source paper

Q99 JEE Main 2023 · 12 Apr · Shift 1 MCQ

A wire of resistance 160 Ω is melted and drawn in a wire of one-fourth of its length. The new resistance of the wire will be

(A) 16 Ω
(B) 10 Ω
(C) 640 Ω
(D) 40 Ω

Answer: (B) 10 Ω · Key from source paper

Q100 JEE Main 2023 · 12 Apr · Shift 1 Numerical

The current flowing through a conductor connected across a source is 2 A and 1.2 A at 0°C and 100°C respectively. The current flowing through the conductor at 50°C will be _____ $\times 10^2$ mA.

Numerical value type: the answer is a number.

Answer: 15. · Key from source paper

Q101 JEE Main 2023 · 11 Apr · Shift 1 MCQ

Two identical heater filaments are connected first in parallel and then in series. At the same applied voltage, the ratio of heat produced in same time for parallel to series will be:

(A) $1:4$

(B) $4:1$

(C) $2:1$

(D) $1:2$

Answer: (B) $4:1$ · Key from source paper

Q102 JEE Main 2023 · 11 Apr · Shift 1 Numerical

In the circuit diagram shown in figure given below, the current flowing through resistance 3 Ω is $\frac{x}{3}$ A. The value of x is _____.

(see the figure above)

Q27. In the circuit diagram shown in figure given below, the current flowing through resistance 3 Ω is $\frac{x}{3}$ A. The value of x is _____.

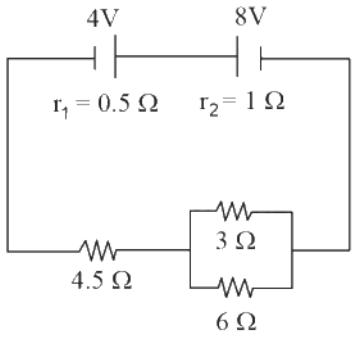

Numerical value type: the answer is a number.

Answer: 1. · Key from source paper

Q103 JEE Main 2023 · 11 Apr · Shift 2 MCQ

see figure

Q18.

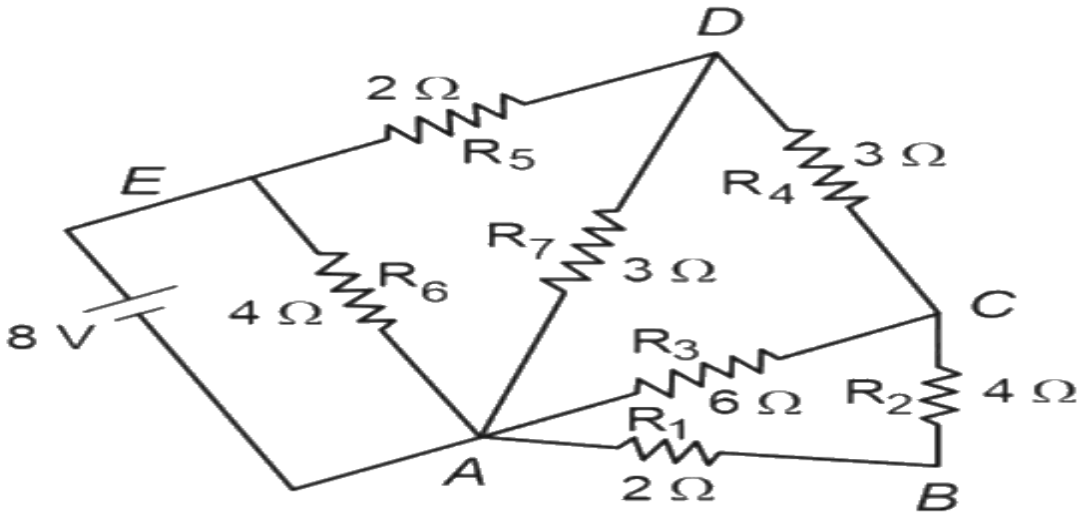

The current flowing through R_2 is :

(1) $\frac{2}{3}$ A (2) $\frac{1}{2}$ A

(3) $\frac{1}{3}$ A (4) $\frac{1}{4}$ A

(A) $\frac{2}{3}$ A

(B) $\frac{1}{2}$ A

(C) $\frac{1}{3}$ A

(D) $\frac{1}{4}$ A

Answer: (C) $\frac{1}{3}$ A · Key from source paper

Q104 JEE Main 2023 · 11 Apr · Shift 2 Numerical

Two identical cells each of emf 1.5 V are connected in series across a 10 Ω resistance. An ideal voltmeter connected across 10 Ω resistance reads 1.5 V. The internal resistance of each cell is _____ Ω.

Numerical value type: the answer is a number.

Answer: 5. · Key from source paper

Q105 JEE Main 2023 · 10 Apr · Shift 1 MCQ

The equivalent resistance of the circuit shown below between points a and b is :

(see the figure above)

Q12. The equivalent resistance of the circuit shown below between points a and b is :

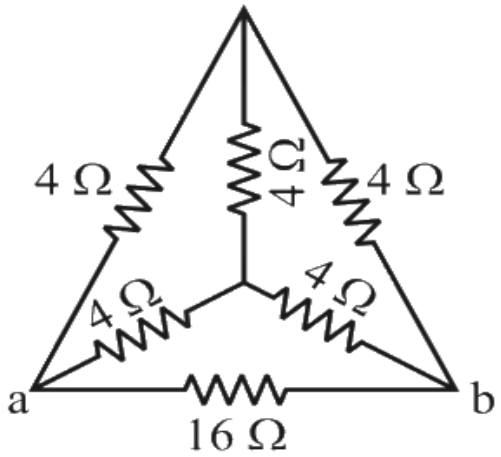

(1) 16 Ω
(2) 3.2 Ω
(3) 24 Ω
(4) 20 Ω

(A) $16\ \Omega$
(B) $3.2\ \Omega$
(C) $24\ \Omega$
(D) $20\ \Omega$

Answer: (B) $3.2\ \Omega$ · Key from source paper

Q106 JEE Main 2023 · 10 Apr · Shift 1 Numerical

10 resistors each of resistance $10\ \Omega$ can be connected in such as to get maximum and minimum equivalent resistance. The ratio of maximum and minimum equivalent resistance will be _____.

Numerical value type: the answer is a number.

Answer: 100. · Key from source paper

Q107 JEE Main 2023 · 10 Apr · Shift 2 MCQ

In a metallic conductor, under the effect of applied electric field, the free electrons of the conductor

(A) Drift from higher potential to lower potential
(B) Move with the uniform velocity throughout from lower potential to higher potential
(C) Move in the straight line paths in the same direction
(D) Move in the curved paths from lower potential to higher potential

Answer: (D) Move in the curved paths from lower potential to higher potential · Key from source paper

---

Q108 JEE Main 2023 · 10 Apr · Shift 2 Numerical

A rectangular parallelopiped is measured as 1 cm $\times$ 1 cm $\times$ 100 cm. If its specific resistance is $3 \times 10^{-7}\ \Omega\,\mathrm{m}$, then the resistance between its two opposite rectangular faces will be _____ $\times 10^{-7}\ \Omega$.

(see the figure above)

Q26. A rectangular parallelopiped is measured as $1\ \text{cm} \times 1\ \text{cm} \times 100\ \text{cm}$. If its specific resistance is $3 \times 10^{-7}\ \Omega$ m, then the resistance between its two opposite rectangular faces will be _____ $\times 10^{-7}\ \Omega$.

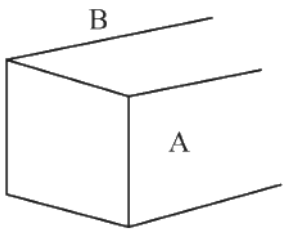

Numerical value type: the answer is a number.

Answer: 3. · Key from source paper

Q109 JEE Main 2023 · 8 Apr · Shift 1 Numerical

A current of 2 A flows through a wire of cross-sectional area $25.0\ \text{mm}^2$. The number of free electrons in a cubic meter are 2.0×10^{28}. The drift velocity of the electrons is _____ $\times 10^{-6}\ \text{ms}^{-1}$ (given, charge on electron $= 1.6 \times 10^{-19}\ \text{C}$).

Numerical value type: the answer is a number.

Answer: 25. · Key from source paper

Q110 JEE Main 2023 · 8 Apr · Shift 2 MCQ

The equivalent resistance between A and B as shown in figure is:

(see the figure above)

Q17. The equivalent resistance between A and B as shown in figure is:

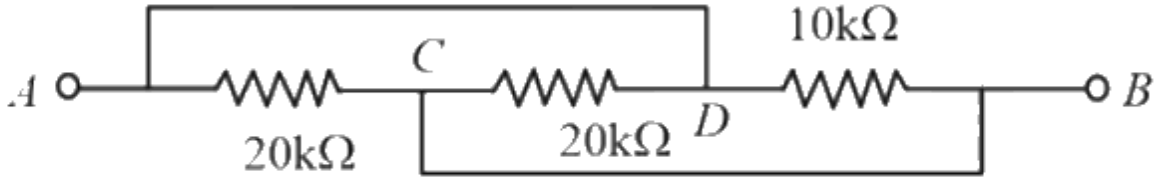

(1) 10 kΩ
(2) 5 kΩ
(3) 20 kΩ
(4) 30 kΩ

(A) $10\ \text{k}\Omega$
(B) $5\ \text{k}\Omega$
(C) $20\ \text{k}\Omega$
(D) $30\ \text{k}\Omega$

Answer: (B) $5\ \text{k}\Omega$ · Key from source paper

Q111 JEE Main 2023 · 8 Apr · Shift 2 Numerical

The number density of free electrons in copper is nearly $8 \times 10^{28}\ \mathrm{m}^{-3}$. A copper wire has its area of cross-section $= 2 \times 10^{-6}\ \mathrm{m}^2$ and is carrying a current of $3.2\ \mathrm{A}$. The drift speed of the electrons is _____ $\times 10^{-6}\ \mathrm{m\,s}^{-1}$.

Numerical value type: the answer is a number.

Answer: 125. · Key from source paper

Q112 JEE Main 2023 · 6 Apr · Shift 1 Numerical

The length of a metallic wire is increased by 20% and its area of cross-section is reduced by 4%. The percentage change in resistance of the metallic wire is _____ .

Numerical value type: the answer is a number.

Answer: 25. · Key from source paper

Q113 JEE Main 2023 · 6 Apr · Shift 2 MCQ

A student is provided with a variable voltage source V, a test resistor $R_T = 10\,\Omega$, two identical galvanometers G_1 and G_2 and two additional resistors, $R_1 = 10\,\mathrm{M}\Omega$ and $R_2 = 0.001\,\Omega$. For conducting an experiment to verify ohm's law, the most suitable circuit is:

Q18. A student is provided with a variable voltage source V, a test resistor $R_T = 10\Omega$, two identical galvanometers G_1 and G_2 and two additional resistors, $R_1 = 10M\Omega$ and $R_2 = 0.001\Omega$. For conducting an experiment to verify ohm's law, the most suitable circuit is:

(1)

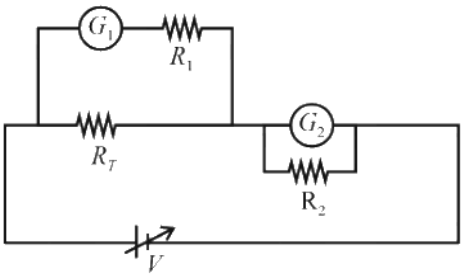

(2)

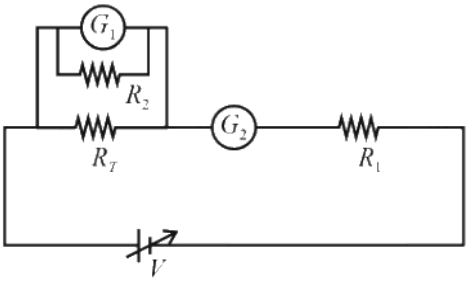

(3)

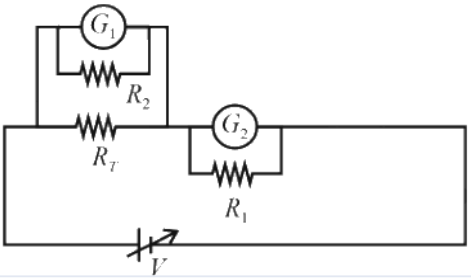

(4)

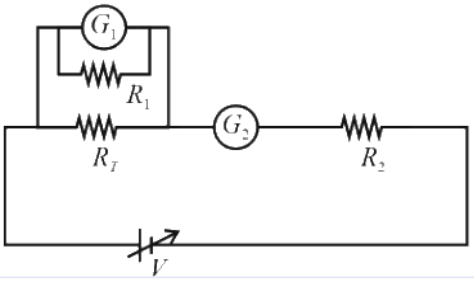

(A) *see figure*

(B) *see figure*

(C) *see figure*

(D) *see figure*

Answer: (A) · Key from source paper

Q114 JEE Main 2023 · 6 Apr · Shift 2 MCQ

Figure shows a part of an electric circuit. The potentials at points a, b and c are 30 V, 12 V and 2 V respectively. The current through the $20\ \Omega$ resistor will be,

(see the figure above)

Q19. Figure shows a part of an electric circuit. The potentials at points a, b and c are 30 V, 12 V and 2 V respectively. The current through the $20\ \Omega$ resistor will be,

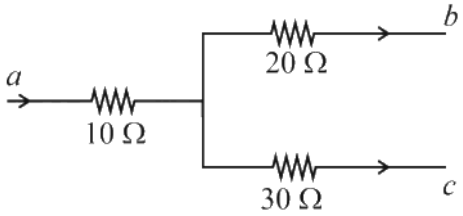

(1) 1.0 A
(2) 0.4 A
(3) 0.6 A
(4) 0.2 A

(A) 1.0 A
(B) 0.4 A
(C) 0.6 A
(D) 0.2 A

Answer: (B) 0.4 A · Key from source paper

Q115 JEE Main 2023 · 6 Apr · Shift 2 Numerical

As shown in the figure the voltmeter reads 2 V across $5\ \Omega$ resistor. The resistance of the voltmeter is _____ Ω.

(see the figure above)

Q20. As shown in the figure the voltmeter reads 2 V across $5\ \Omega$ resistor. The resistance of the voltmeter is _____ Ω

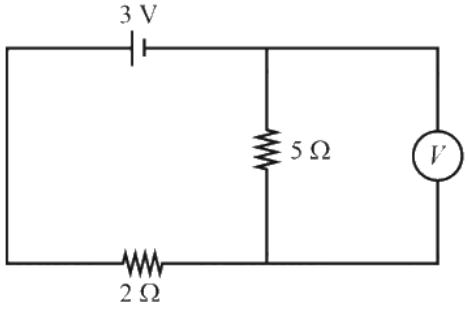

Numerical value type: the answer is a number.

Answer: 20. · Key from source paper

Q116 JEE Main 2023 · 1 Feb · Shift 1 MCQ

The equivalent resistance between A and B of the network shown in figure:

(see the figure above)

Q12. The equivalent resistance between A *and* B of the network shown in figure:

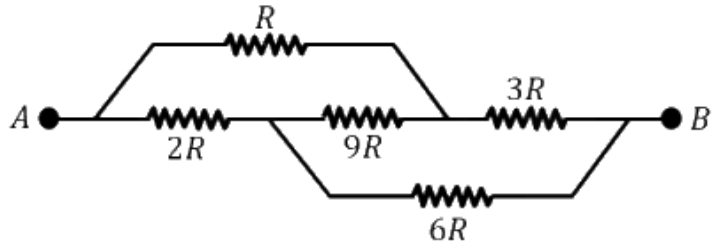

(1) $11\frac{2R}{3}$

(2) $14\ \ R$

(3) $21\ \ R$

(4) $\frac{8}{3}\ \ R$

(A) $11\frac{2R}{3}$

(B) $14\ R$

(C) $21\ R$

(D) $\frac{8}{3}\ R$

Answer: (D) $\frac{8}{3}\ R$ · Key from source paper

Q117 JEE Main 2023 · 1 Feb · Shift 1 Numerical

In an experiment to find emf of a cell using potentiometer, the length of null point for a cell of emf 1.5 V is found to be 60 cm. If this cell is replaced by another cell of emf E. the length-of null point increases by 40 cm. The value of E is $\frac{x}{10}$ V. The value of x is _____.

Numerical value type: the answer is a number.

Answer: 25. · Key from source paper

Q118 JEE Main 2023 · 1 Feb · Shift 2 MCQ

Given below are two statements : One is labelled as Assertion A and the other is labelled as Reason R.
Assertion A : For measuring the potential difference across a resistance of 600 Ω, the voltmeter with resistance 1000 Ω will be preferred over voltmeter with resistance 4000 Ω.
Reason R : Voltmeter with higher resistance will draw smaller current than voltmeter with lower resistance.
In the light of the above statements, choose the most appropriate answer from the options given below

(A) A is not correct but R is correct

(B) Both A and R are correct and R is the correct explanation of A

(C) Both A and R are correct but R is not the correct explanation of A

(D) A is correct but R is not correct

Answer: (A) A is not correct but R is correct · Key from source paper

Q119 JEE Main 2023 · 1 Feb · Shift 2 MCQ

Equivalent resistance between the adjacent corners of a regular n-sided polygon of uniform wire of resistance R would be :

(A) $\frac{(n-1)R}{n^2}$

(B) $\frac{(n-1)R}{(2n-1)}$

(C) $\frac{n^2R}{n-1}$

(D) $\frac{(n-1)R}{n}$

Answer: (A) $\frac{(n-1)R}{n^2}$ · Key from source paper

Q120 JEE Main 2023 · 1 Feb · Shift 2 Numerical

In the given circuit the value of $\left|\frac{I_1+I_3}{I_2}\right|$ is:

(see the figure above)

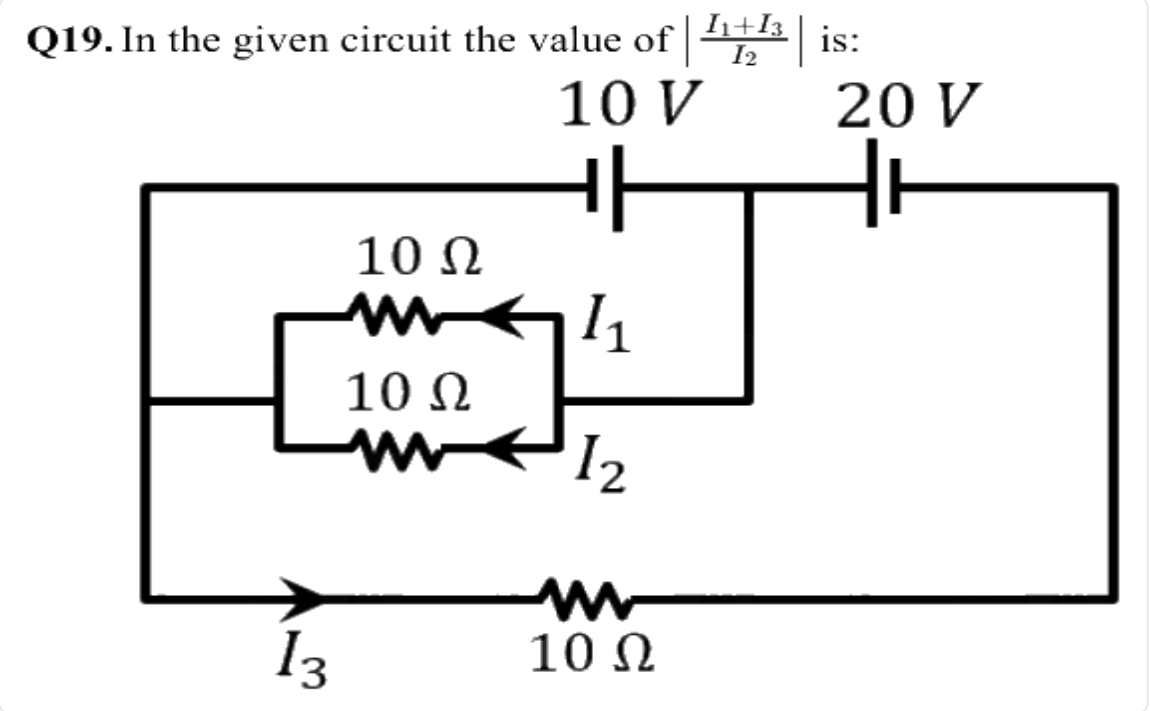

Numerical value type: the answer is a number.

Answer: 2. · Key from source paper

Q121 JEE Main 2023 · 31 Jan · Shift 1 MCQ

The drift velocity of electrons for a conductor connected in an electrical circuit is V_d. The conductor is now replaced by another conductor with same material and same length but double the area of cross-section. The applied voltage remains same. The new drift velocity of electrons will be

(A) V_d
(B) $\frac{V_d}{2}$
(C) $\frac{V_d}{4}$
(D) $2V_d$

Answer: (A) V_d · Key from source paper

Q122 JEE Main 2023 · 31 Jan · Shift 1 Numerical

Two identical cells, when connected either in parallel or in series gives same current in an external resistance 5 Ω. The internal resistance of each cell will be _____ Ω.

Numerical value type: the answer is a number.

Answer: 5. · Key from source paper

Q123 JEE Main 2023 · 31 Jan · Shift 2 MCQ

The H amount of thermal energy is developed by a resistor in 10 s when a current of 4 A is passed through it. If the current is increased to 16 A, the thermal energy developed by the resistor in 10 s will be

(A) H
(B) $16H$
(C) $\frac{H}{4}$
(D) $4H$

Answer: (B) $16H$ · Key from source paper

Q124 JEE Main 2023 · 30 Jan · Shift 1 MCQ

The charge flowing in a conductor changes with time as $Q_t = \alpha t - \beta t^2 + \gamma t^3$, where α, β and γ are constants. Minimum value of current is:

(A) $\alpha - \frac{3\beta^2}{\gamma}$
(B) $\alpha - \frac{\gamma^2}{3\beta}$
(C) $\beta - \frac{\alpha^2}{3\gamma}$
(D) $\alpha - \frac{\beta^2}{3\gamma}$

Answer: (D) $\alpha - \frac{\beta^2}{3\gamma}$ · Key from source paper

---

Q125 JEE Main 2023 · 30 Jan · Shift 1 Numerical

In the following circuit, the magnitude of current I_1 is _____ A.

(see the figure above)

Q25. In the following circuit, the magnitude of current I_1, is _____ A.

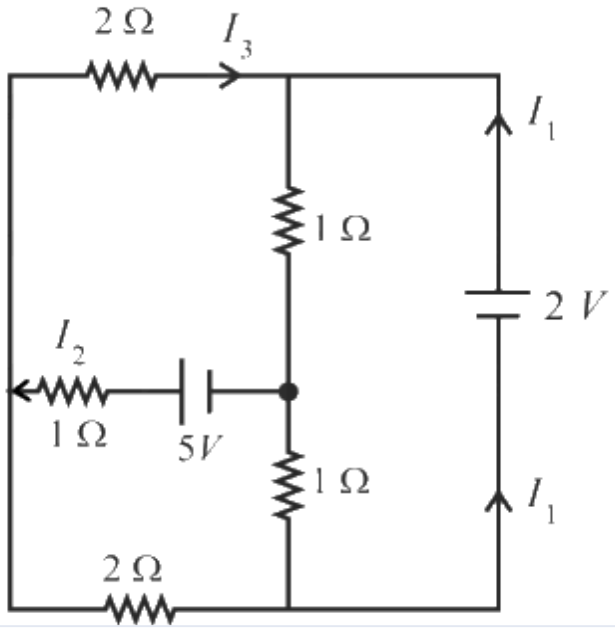

Numerical value type: the answer is a number.

Answer: 1.5. · Checked by our team

Q126 JEE Main 2023 · 30 Jan · Shift 2 MCQ

The equivalent resistance between A and B is _____.

(see the figure above)

Q17. The equivalent resistance between A and B is _____.

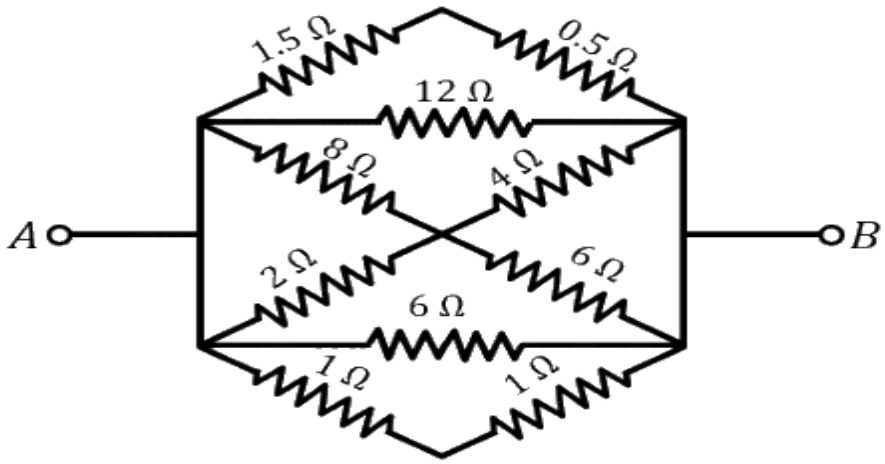

(1) $\frac{2}{3}\Omega$
(2) $\frac{1}{2}\Omega$
(3) $\frac{3}{2}\Omega$
(4) $\frac{1}{3}\Omega$

(A) $\frac{2}{3}\ \Omega$
(B) $\frac{1}{2}\ \Omega$
(C) $\frac{3}{2}\ \Omega$
(D) $\frac{1}{3}\ \Omega$

Answer: (A) $\frac{2}{3}\ \Omega$ · Key from source paper

Q127 JEE Main 2023 · 30 Jan · Shift 2 Numerical

If the potential difference between B and D is zero, the value of x is $\frac{1}{n}\ \Omega$. The value of n is _____.

(see the figure above)

Q18. If the potential difference between B and D is zero, the value of x is $\frac{1}{n}\ \Omega$. The value of n is _____.

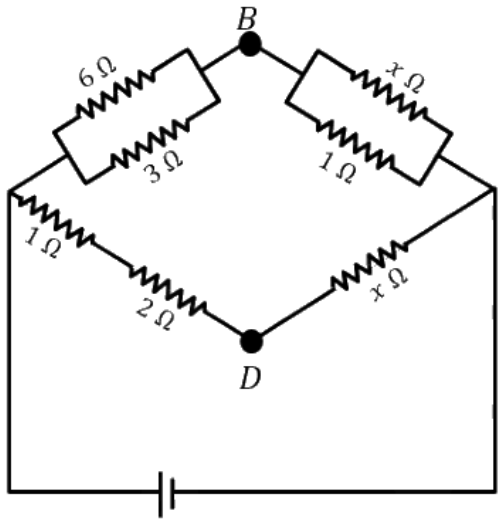

Numerical value type: the answer is a number.

Answer: 2. · Key from source paper

Q128 JEE Main 2023 · 29 Jan · Shift 1 MCQ

Ratio of thermal energy released in two resistor R and $3R$ connected in parallel in an electric circuit is :

(A) $3:1$
(B) $1:1$
(C) $1:3$
(D) $1:27$

Answer: (A) $3:1$ · Key from source paper

Q129 JEE Main 2023 · 29 Jan · Shift 1 Numerical

In a metre bridge experiment the balance point is obtained if the gaps are closed by $2\ \Omega$ and $3\ \Omega$. A shunt of $X\ \Omega$ is added to $3\ \Omega$ resistor to shift the balancing point by $22.5\ \mathrm{cm}$. The value of X is _____.

Numerical value type: the answer is a number.

Answer: 2. · Key from source paper

Q130 JEE Main 2023 · 29 Jan · Shift 2 MCQ

With the help of potentiometer, we can determine the value of emf of a given cell. The sensitivity of the potentiometer is
(A) directly proportional to the length of the potentiometer wire
(B) directly proportional to the potential gradient of the wire
(C) inversely proportional to the potential gradient of the wire
(D) inversely proportional to the length of the potentiometer wire
Choose the correct option for the above statements:

(A) B and D only
(B) A and C only
(C) A only
(D) C only

Answer: (B) A and C only · Key from source paper

Q131 JEE Main 2023 · 29 Jan · Shift 2 Numerical

A null point is found at 200 cm in potentiometer when cell in secondary circuit is shunted by $5\ \Omega$. When a resistance of $15\ \Omega$ is used for shunting null point moves to 300 cm. The internal resistance of the cell is _____ Ω.

Numerical value type: the answer is a number.

Answer: 5. · Key from source paper

Q132 JEE Main 2023 · 29 Jan · Shift 2 Numerical

When two resistance R_1 and R_2 connected in series and introduced into the left gap of a meter bridge and a resistance of $10\ \Omega$ is introduced into the right gap, a null point is found at 60 cm from left side. When R_1 and R_2 are connected in parallel and introduced into the left gap, a resistance of $3\ \Omega$ is introduced into the right-gap to get null point at 40 cm from left end. The product of R_1R_2 is _____ Ω^2.

Numerical value type: the answer is a number.

Answer: 30. · Key from source paper

Q133 JEE Main 2023 · 25 Jan · Shift 1 MCQ

A uniform metallic wire carries a current 2 A, when 3.4 V battery is connected across it. The mass of uniform metallic wire is $8.92 \times 10^{-3}\ \mathrm{kg}$, density is $8.92 \times 10^{3}\ \mathrm{kg\,m^{-3}}$ and resistivity is $1.7 \times 10^{-8}\ \Omega - \mathrm{m}$. The length of wire is :

(A) $l = 6.8\ \text{m}$
(B) $l = 10\ \text{m}$
(C) $l = 5\ \text{m}$
(D) $l = 100\ \text{m}$

Answer: (B) $l = 10\ \text{m}$ · Key from source paper

Q134 JEE Main 2023 · 25 Jan · Shift 1 Numerical

In the given circuit, the equivalent resistance between the terminal A and B is _____ Ω.
(see the figure above)

Q18. In the given circuit, the equivalent resistance between the terminal A and B is ____ Ω

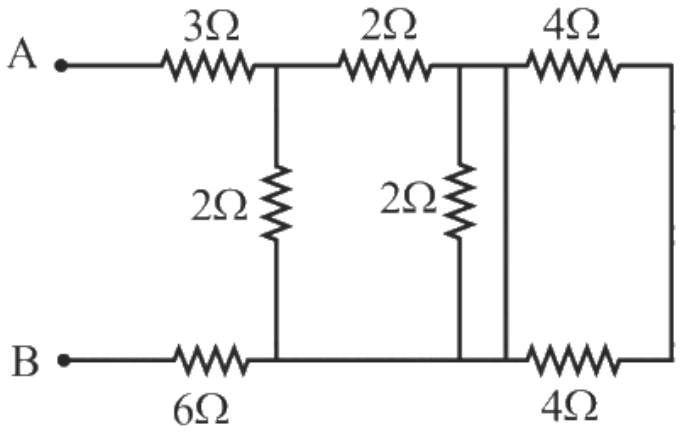

Numerical value type: the answer is a number.

Answer: 10. · Key from source paper

Q135 JEE Main 2023 · 25 Jan · Shift 2 MCQ

The resistance of a wire is 5 Ω. Its new resistance in ohm, if stretched to 5 times of its original length will be :

(A) 625
(B) 125
(C) 5
(D) 25

Answer: (B) 125 · Key from source paper

Q136 JEE Main 2023 · 25 Jan · Shift 2 Numerical

Two cells are connected between points A and B as shown. Cell 1 has emf of 12 V and internal resistance of 3 Ω. Cell 2 has emf of 6 V and internal resistance of 6 Ω. An external resistor R of 4 Ω is connected across A and B. The current flowing through R will be _____ A.

(see the figure above)

Q20. Two cells are connected between points A and B as shown. Cell 1 has emf of 12 V and internal resistance of 3 Ω. Cell 2 has emf of 6 V and internal resistance of 6 Ω. An external resistor R of 4 Ω is connected across A and B. The current flowing through R will be _____ A.

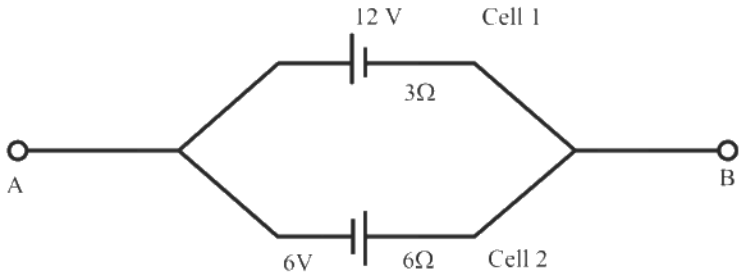

Numerical value type: the answer is a number.

Answer: 1. · Key from source paper

Q137 JEE Main 2023 · 24 Jan · Shift 1 MCQ

As shown in the figure, a network of resistors is connected to a battery of 24 V with an internal resistance of 3 Ω. The currents through the resistors R_4 and R_5 are I_4 and I_5 respectively. The values of I_4 and I_5 are:

(see the figure above)

Q11. As shown in the figure, a network of resistors is connected to a battery of 24 V with an internal resistance of 3 Ω. The currents through the resistors R_4 and R_5 are I_4 and I_5 respectively. The values of I_4 and I_5 are:

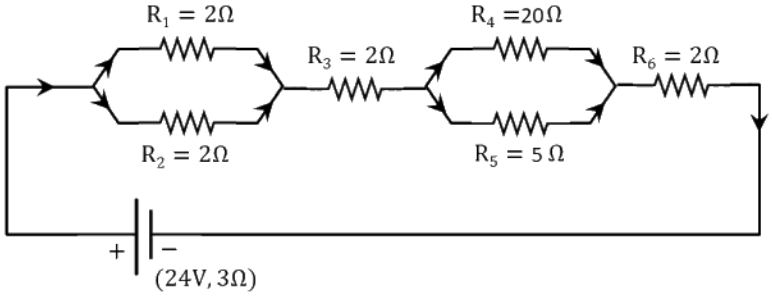

(1) $I_4 = \frac{8}{5}$ A and $I_5 = \frac{2}{5}$ A
(2) $I_4 = \frac{24}{5}$ A and $I_5 = \frac{6}{5}$ A
(3) $I_4 = \frac{6}{5}$ A and $I_5 = \frac{24}{5}$ A
(4) $I_4 = \frac{2}{5}$ A and $I_5 = \frac{8}{5}$ A

(A) $I_4 = \frac{8}{5}$ A and $I_5 = \frac{2}{5}$ A
(B) $I_4 = \frac{24}{5}$ A and $I_5 = \frac{6}{5}$ A
(C) $I_4 = \frac{6}{5}$ A and $I_5 = \frac{24}{5}$ A
(D) $I_4 = \frac{2}{5}$ A and $I_5 = \frac{8}{5}$ A

Answer: (D) $I_4 = \frac{2}{5}$ A and $I_5 = \frac{8}{5}$ A · Key from source paper

Q138 JEE Main 2023 · 24 Jan · Shift 1 Numerical

A hollow cylindrical conductor has length of 3.14 m, while its inner and outer diameters are 4 mm and 8 mm respectively. The resistance of the conductor is $n \times 10^{-3}$ Ω. If the resistivity of the material is 2.4×10^{-8} Ω m. The value of n is _____.

Numerical value type: the answer is a number.

Answer: 2. · Key from source paper

Q139 JEE Main 2023 · 24 Jan · Shift 2 MCQ

A cell of emf 90 V is connected across series combination of two resistors each of 100 Ω resistance. A voltmeter of resistance 400 Ω is used to measure the potential difference across each resistor. The reading of the voltmeter will be:

(A) 40 V
(B) 45 V
(C) 80 V
(D) 90 V

Answer: (A) 40 V · Key from source paper

Q140 JEE Main 2023 · 24 Jan · Shift 2 Numerical

If a copper wire is stretched to increase its length by 20%. The percentage increase in resistance of the wire is _____%.

Numerical value type: the answer is a number.

Answer: 44. · Key from source paper

Q141 JEE Main 2022 · 29 Jul · Shift 1 MCQ

Two metallic wires of identical dimensions are connected is series. If σ_1 and σ_2 are the conductivities of the these wires respectively, the effective conductivity of the combination is :

(A) $\frac{\sigma_1\sigma_2}{\sigma_1+\sigma_2}$
(B) $\frac{2\sigma_1\sigma_2}{\sigma_1+\sigma_2}$
(C) $\frac{\sigma_1+\sigma_2}{2\sigma_1\sigma_2}$
(D) $\frac{\sigma_1+\sigma_2}{\sigma_1\sigma_2}$

Answer: (B) $\frac{2\sigma_1\sigma_2}{\sigma_1+\sigma_2}$ · Key from source paper

---

Q142 JEE Main 2022 · 29 Jul · Shift 1 Numerical

The current I flowing through the given circuit will be _____ A.
(see the figure above)

Q26. The current I flowing through the given circuit will be _____ A.

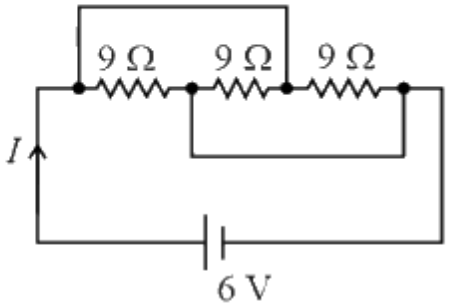

Numerical value type: the answer is a number.

Answer: 2. · Key from source paper

Q143 JEE Main 2022 · 29 Jul · Shift 2 MCQ

Given below are two statements: one is labelled as Assertion A and the other is labelled as Reason R.
Assertion A: Alloys such as constantan and manganin are used in making standard resistance coils.
Reason R: Constantan and manganin have very small value of temperature coefficient of resistance.
In the light of the above statements, choose the correct answer from the options given below.

(A) Both A and R are true and R is the correct explanation of A
(B) Both A and R are true but R is NOT the correct explanation of A.
(C) A is true but R is false.
(D) A is false but R is true.

Answer: (A) Both A and R are true and R is the correct explanation of A · Key from source paper

---

Q144 JEE Main 2022 · 29 Jul · Shift 2 MCQ

A 1 m long wire is broken into two unequal parts X and Y. The X part of the wire is stretched into another wire W. Length of W is twice the length of X and the resistance of W is twice that of Y. Find the ratio of length of X and Y.

(A) $1:4$
(B) $1:2$
(C) $4:1$
(D) $2:1$

Answer: (B) $1:2$ · Key from source paper

Q145 JEE Main 2022 · 28 Jul · Shift 1 MCQ

A wire of resistance R_1 is drawn out so that its length is increased by twice of its original length. The ratio of new resistance to original resistance is:

(A) $9 : 1$

(B) $1 : 9$

(C) $4 : 1$

(D) $3 : 1$

Answer: (A) $9 : 1$ · Key from source paper

Q146 JEE Main 2022 · 28 Jul · Shift 1 Numerical

As shown in the figure, a potentiometer wire of resistance $20\ \Omega$ and length $300\ \text{cm}$ is connected with resistance box (R.B.) and a standard cell of emf $4\ \text{V}$. For a resistance 'R' of resistance box introduced into the circuit, the null point for a cell of $20\ \text{mV}$ is found to be $60\ \text{cm}$. The value of 'R' is _____ Ω.

(see the figure above)

Q27. As shown in the figure, a potentiometer wire of resistance 20 Ω and length 300 cm is connected with resistance box (R.B.) and a standard cell of emf 4 V. For a resistance 'R' of resistance box introduced into the circuit, the null point for a cell of 20 mV is found to be 60 cm. The value of 'R' is _____ Ω.

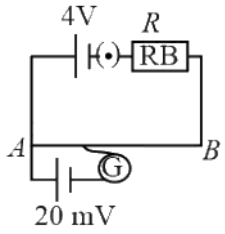

Numerical value type: the answer is a number.

Answer: 780. · Key from source paper

Q147 JEE Main 2022 · 28 Jul · Shift 2 MCQ

Given below are two statements :

Statement I : A uniform wire of resistance $80\ \Omega$ is cut into four equal parts. These parts are now connected in parallel. The equivalent resistance of the combination will be $5\ \Omega$.

Statement II : Two resistance $2R$ and $3R$ are connected in parallel in an electric circuit. The value of thermal energy developed in $3R$ and $2R$ will be in the ratio $3 : 2$.

In the light of the above statements, choose the most appropriate answer from the options given below

(A) Both statement I and statement II are correct

(B) Both statement I and statement II are incorrect

(C) Statement I is correct but statement II is incorrect

(D) Statement I is incorrect but statement II is correct.

Answer: (C) Statement I is correct but statement II is incorrect · Key from source paper

Q148 JEE Main 2022 · 28 Jul · Shift 2 Numerical

An electrical bulb rated $220\ \mathrm{V}, 100\ \mathrm{W}$, is connected in series with another bulb rated $220\ \mathrm{V}, 60\ \mathrm{W}$. If the voltage across combination is $220\ \mathrm{V}$, the power consumed by the $100\ \mathrm{W}$ bulb will be about _____ W.

Numerical value type: the answer is a number.

Answer: 14. · Key from source paper

Q149 JEE Main 2022 · 27 Jul · Shift 1 MCQ

Two sources of equal emfs are connected in series. This combination is connected to an external resistance R. The internal resistances of the two sources are r_1 and r_2 ($r_1 > r_2$). If the potential difference across the source of internal resistance r_1 is zero then the value of R will be

(A) $r_1 - r_2$
(B) $\frac{r_1 r_2}{r_1 + r_2}$
(C) $\frac{r_1 + r_2}{2}$
(D) $r_2 - r_1$

Answer: (A) $r_1 - r_2$ · Key from source paper

Q150 JEE Main 2022 · 27 Jul · Shift 1 Numerical

A 1 m long copper wire carries a current of 1 A. If the cross section of the wire is 2.0 mm^2 and the resistivity of copper is $1.7 \times 10^{-8}\ \Omega$ m. The force experienced by moving electron in the wire is _____ $\times 10^{-23}$ N
(Charge of electron= 1.6×10^{-19}C)

Numerical value type: the answer is a number.

Answer: 136. · Key from source paper

Q151 JEE Main 2022 · 27 Jul · Shift 1 Numerical

In meter bridge experiment for measuring unknown resistance 'S', the null point is obtained at a distance 30 cm from the left side as shown at point D. If R is 5.6 kΩ, then the value of unknown resistance 'S' will be _____ Ω.
(see the figure above)

Q27. In meter bridge experiment for measuring unknown resistance 'S', the null point is obtained at a distance 30 cm from the left side as shown at point D. If R is 5.6 kΩ, then the value of unknown resistance 'S' will be _____ Ω.

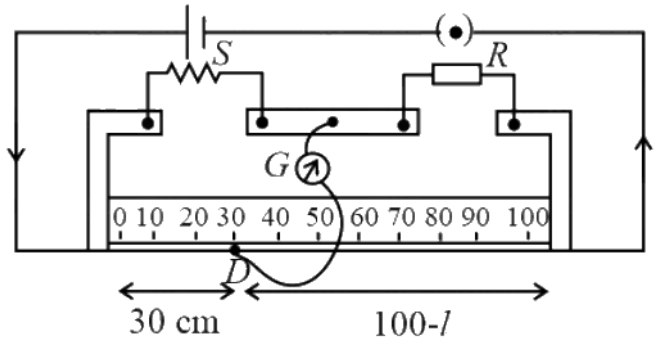

Numerical value type: the answer is a number.

Answer: 2400. · Key from source paper

Q152 JEE Main 2022 · 27 Jul · Shift 2 MCQ

A. The drift velocity of electrons decreases with the increase in the temperature of conductor.
B. The drift velocity is inversely proportional to the area of cross-section of given conductor.
C. The drift velocity does not depend on the applied potential difference to the conductor.
D. The drift velocity of electron is inversely proportional to the length of the conductor.
E. The drift velocity increases with the increase in temperature of conductor.
Choose the correct answer from the options given below:

(A) A and B only
(B) A and D only
(C) B and E only
(D) B and C only

Answer: (B) A and D only · Key from source paper

Q153 JEE Main 2022 · 27 Jul · Shift 2 Numerical

In the given figure of meter bridge experiment, the balancing length AC corresponding to null deflection of the galvanometer is 40 cm. The balancing length, if the radius of the wire AB is doubled, will be _____ cm.
(see the figure above)

Q28. In the given figure of meter bridge experiment, the balancing length AC corresponding to null deflection of the galvanometer is 40 cm. The balancing length, if the radius of the wire AB is doubled, will be _____ cm.

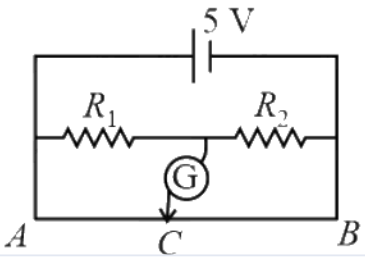

Numerical value type: the answer is a number.

Answer: 40. · Key from source paper

Q154 JEE Main 2022 · 26 Jul · Shift 1 MCQ

The current I in the given circuit will be

(see the figure above)

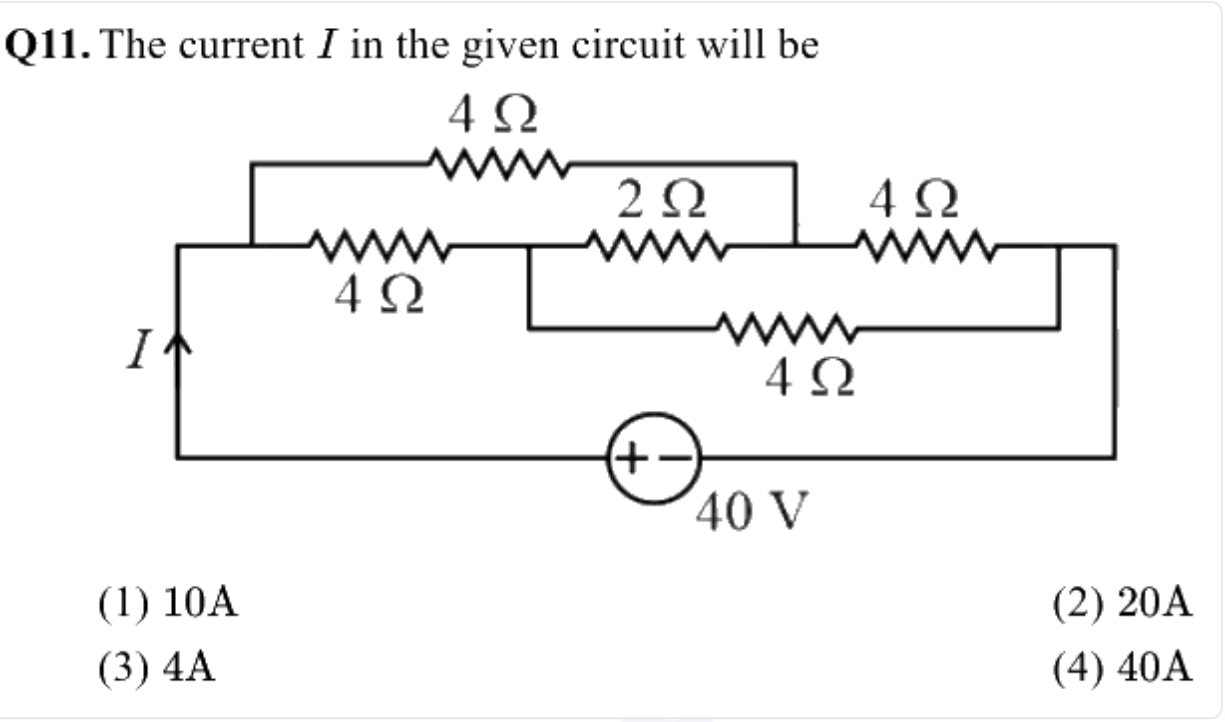

(A) 10A
(B) 20A
(C) 4A
(D) 40A

Answer: (A) 10A · Key from source paper

Q155 JEE Main 2022 · 26 Jul · Shift 1 Numerical

Resistance are connected in a meter bridge circuit as shown in the figure. The balancing length l_1 is 40 cm. Now an unknown resistance x is connected in series with P and new balancing length is found to be 80 cm measured from the same end. Then the value of x will be _____ Ω.

(see the figure above)

Q26. Resistance are connected in a meter bridge circuit as shown in the figure. The balancing length l_1 is 40 cm. Now an unknown resistance x is connected in series with P and new balancing length is found to be 80 cm measured from the same end. Then the value of x will be _____ Ω.

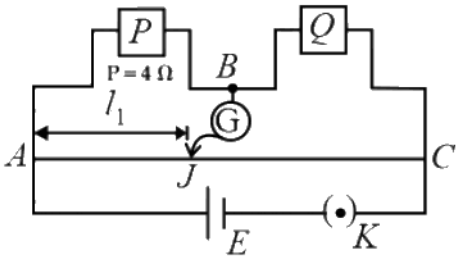

Numerical value type: the answer is a number.

Answer: 20. · Key from source paper

Q156 JEE Main 2022 · 26 Jul · Shift 2 MCQ

A battery of 6 V is connected to the circuit as shown below. The current I drawn from the battery is

(see the figure above)

Q12. A battery of 6 V is connected to the circuit as shown below. The current I drawn from the battery is

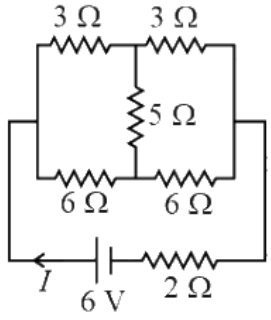

(1) 1 A
(2) 2 A
(3) $\frac{6}{11}$ A
(4) $\frac{4}{3}$ A

(A) 1 A
(B) 2 A
(C) $\frac{6}{11}$ A
(D) $\frac{4}{3}$ A

Answer: (A) 1 A · Key from source paper

Q157 JEE Main 2022 · 26 Jul · Shift 2 Numerical

A potentiometer wire of length 300 cm is connected in series with a resistance 780 Ω and a standard cell of emf 4 V. A constant current flows through potentiometer wire. The length of the null point for cell of emf 20mV is found to be 60 cm. The resistance of the potentiometer wire is _____ Ω.

Numerical value type: the answer is a number.

Answer: 20. · Key from source paper

Q158 JEE Main 2022 · 25 Jul · Shift 1 Numerical

In the given figure, the value of V_0 will be _____ V.

(see the figure above)

Q27. In the given figure, the value of V_0 will be _____ V.

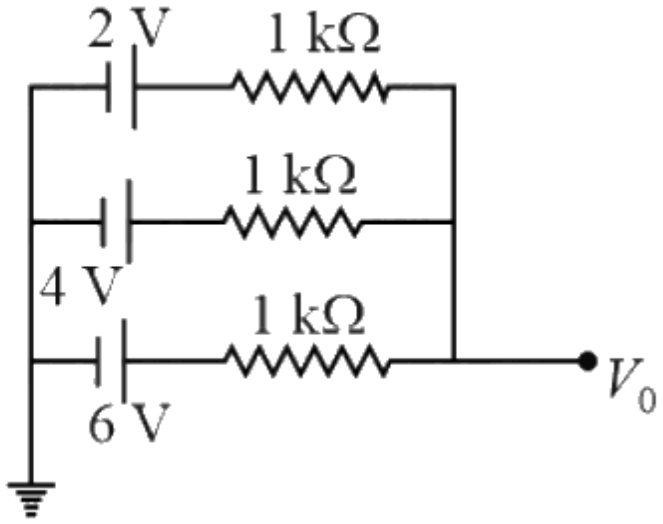

Numerical value type: the answer is a number.

Answer: 4. · Key from source paper

Q159 JEE Main 2022 · 25 Jul · Shift 1 Numerical

Eight copper wire of length l and diameter d are joined in parallel to form a single composite conductor of resistance R. If a single copper wire of length $2l$ have the same resistance R then its diameter will be _____ d.

Numerical value type: the answer is a number.

Answer: 4. · Key from source paper

Q160 JEE Main 2022 · 25 Jul · Shift 2 MCQ

A current of 15 mA flows in the circuit as shown in figure. The value of potential difference between the points A and B will be

(see the figure above)

Q12. A current of 15 mA flows in the circuit as shown in figure. The value of potential difference between the points A and B will be

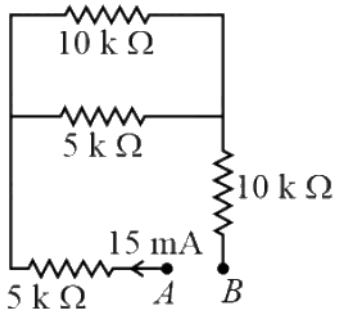

(1) 50V
(2) 75V
(3) 150V
(4) 275V

(A) 50V
(B) 75V
(C) 150V
(D) 275V

Answer: (D) 275V · Key from source paper

Q161 JEE Main 2022 · 25 Jul · Shift 2 Numerical

In a potentiometer arrangement, a cell of emf 1.20 V gives a balance point at 36 cm length of wire. This cell is now replaced by another cell of emf 1.80 V. The difference in balancing length of potentiometer wire in above conditions will be _____ cm.

Numerical value type: the answer is a number.

Answer: 18. · Key from source paper

Q162 JEE Main 2022 · 29 Jun · Shift 1 Numerical

Two coils require 20 minutes and 60 minutes respectively to produce same amount of heat energy when connected separately to the same source. If they are connected in parallel arrangement to the same source; the time required to produce same amount of heat by the combination of coils, will be _____ min.

Numerical value type: the answer is a number.

Answer: 15. · Key from source paper

Q163 JEE Main 2022 · 29 Jun · Shift 1 Numerical

The variation of applied potential and current flowing through a given wire is shown in figure. The length of wire is 31.4 cm. The diameter of wire is measured as 2.4 cm. The resistivity of the given wire is measured as $x \times 10^{-3}\ \Omega$ cm. The value of x is _____ .
[Take $\pi = 3.14$]

(see the figure above)

Q25. The variation of applied potential and current flowing through a given wire is shown in figure. The length of wire is 31.4 cm. The diameter of wire is measured as 2.4 cm. The resistivity of the given wire is measured as $x \times 10^{-3}\ \Omega$ cm. The value of x is _____ .

[Take $\pi = 3.14$]

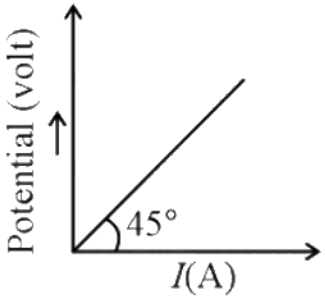

Numerical value type: the answer is a number.

Answer: 144. · Key from source paper

Q164 JEE Main 2022 · 29 Jun · Shift 1 Numerical

For the network shown below, the value of $V_B - V_A$ is _____ V.

(see the figure above)

Q26. For the network shown below, the value of $V_B - V_A$ is _____ V.

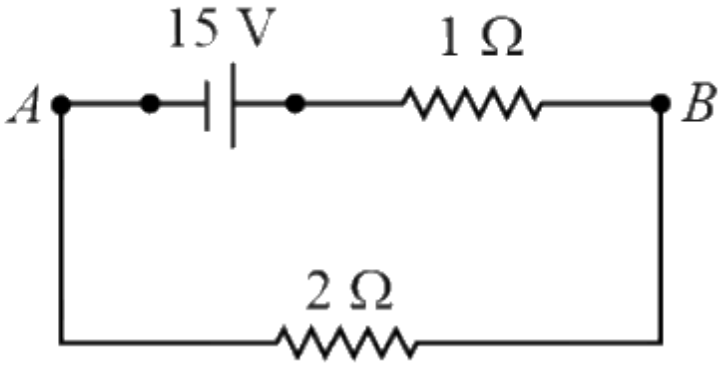

Numerical value type: the answer is a number.

Answer: 10. · Key from source paper

Q165 JEE Main 2022 · 29 Jun · Shift 2 MCQ

The combination of two identical cells, whether connected in series or parallel combination provides the same current through an external resistance of $2\ \Omega$. The value of internal resistance of each cell is

(A) $2\ \Omega$
(B) $4\ \Omega$
(C) $6\ \Omega$
(D) $8\ \Omega$

Answer: (A) $2\ \Omega$ · Key from source paper

Q166 JEE Main 2022 · 29 Jun · Shift 2 Numerical

Two resistors are connected in series across a battery as shown in figure. If a voltmeter of resistance $2000\ \Omega$ is used to measure the potential difference across $500\ \Omega$ resister, the reading of the voltmeter will be _____ V.

(see the figure above)

Q25. Two resistors are connected in series across a battery as shown in figure. If a voltmeter of resistance $2000\ \Omega$ is used to measure the potential difference across $500\ \Omega$ resister, the reading of the voltmeter will be _____ V

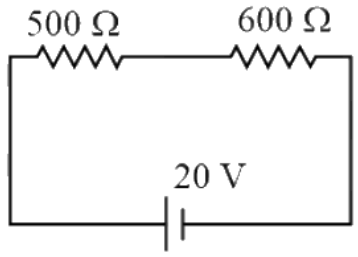

Numerical value type: the answer is a number.

Answer: 8. · Key from source paper

Q167 JEE Main 2022 · 28 Jun · Shift 1 Numerical

A meter bridge setup is shown in the figure. It is used to determine an unknown resistance R using a given resistor of $15\ \Omega$. The galvanometer (G) shows null defection when tapping key is at $43\ \text{cm}$ mark from end A. If the end correction for end A is $2\ \text{cm}$, then the determined value of R will be Ω.

(see the figure above)

Q26. A meter bridge setup is shown in the figure. It is used to determine an unknown resistance R using a given resistor of $15\ \Omega$. The galvanometer (G) shows null defection when tapping key is at $43\ \text{cm}$ mark from end A. If the end correction for end A is $2\ \text{cm}$, then the determined value of R will be Ω.

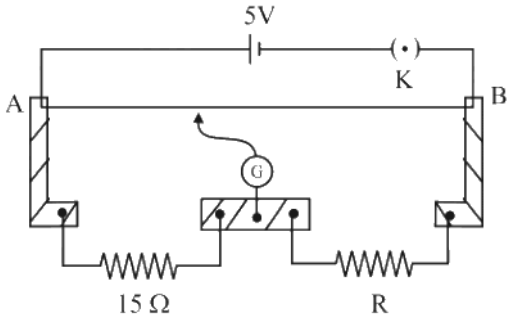

Numerical value type: the answer is a number.

Answer: 19. · Key from source paper

Q168 JEE Main 2022 · 28 Jun · Shift 1 Numerical

Current measured by the ammeter (A) in the reported circuit when no current flows through 10Ω resistance, will be _____ A.

(see the figure above)

Q27. Current measured by the ammeter (A) in the reported circuit when no current flows through 10Ω resistance, will be _____ A.

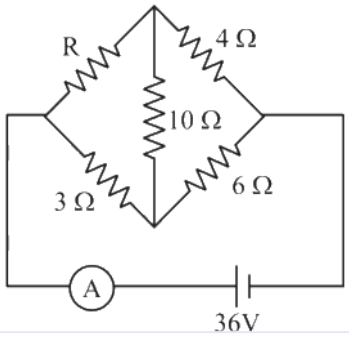

Numerical value type: the answer is a number.

Answer: 10. · Key from source paper

Q169 JEE Main 2022 · 28 Jun · Shift 2 MCQ

Resistance of the wire is measured as $2\ \Omega$ and $3\ \Omega$ at $10^{\circ}\mathrm{C}$ and $30^{\circ}\mathrm{C}$ respectively. Temperature coefficient of resistance of the material of the wire is

(A) $0.033^{\circ}\mathrm{C}^{-1}$
(B) $-0.033^{\circ}\mathrm{C}^{-1}$
(C) $0.011^{\circ}\mathrm{C}^{-1}$
(D) $0.055^{\circ}\mathrm{C}^{-1}$

Answer: (A) $0.033^{\circ}\mathrm{C}^{-1}$ · Key from source paper

Q170 JEE Main 2022 · 28 Jun · Shift 2 Numerical

All resistances in figure are $1\ \Omega$ each. The value of current 'I' is $\frac{a}{5}\ \mathrm{A}$. The value of a is _____ .

(see the figure above)

Q26. All resistances in figure are $1\ \Omega$ each. The value of current 'I' is $\frac{a}{5}$ A. The value of a is _____ .

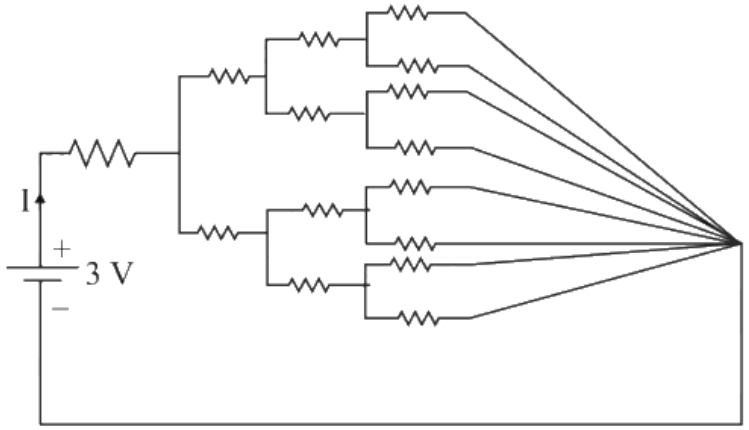

Numerical value type: the answer is a number.

Answer: 8. · Key from source paper

Q171 JEE Main 2022 · 27 Jun · Shift 1 MCQ

A $72\ \Omega$ galvanometer is shunted by a resistance of $8\ \Omega$. The percentage of the total current which passes through the galvanometer is

(A) 0.1%
(B) 10%
(C) 25%
(D) 0.25%

Answer: (B) 10% · Key from source paper

Q172 JEE Main 2022 · 27 Jun · Shift 1 Numerical

A cell, shunted by a $8\ \Omega$ resistance, is balanced across a potentiometer wire of length $3\ \mathrm{m}$. The balancing length is $2\ \mathrm{m}$ when the cell is shunted by a $4\ \Omega$ resistance. The value of internal resistance of the cell will be _____ Ω.

Numerical value type: the answer is a number.

Answer: 8. · Key from source paper

Q173 JEE Main 2022 · 27 Jun · Shift 1 Numerical

The current density in a cylindrical wire of radius $4\ \mathrm{mm}$ is $4 \times 10^6\ \mathrm{A\ m^{-2}}$. The current through the outer portion of the wire between radial distances $\frac{R}{2}$ and R is _____ π A.

Numerical value type: the answer is a number.

Answer: 48. · Key from source paper

Q174 JEE Main 2022 · 27 Jun · Shift 2 Numerical

The current density in a cylindrical wire of radius $r = 4.0\ \text{mm}$ is $1.0 \times 10^6\ \text{A}^2\ \text{m}^2$. The current through the outer portion of the wire between radial distances $\frac{r}{2}$ and r is $x\pi$ A; where x is

Numerical value type: the answer is a number.

Answer: 12. · Key from source paper

Q175 JEE Main 2022 · 27 Jun · Shift 2 Numerical

In the given circuit 'a' is an arbitrary constant. The value of m for which the equivalent circuit resistance is minimum, will be $\sqrt{\frac{x}{2}}$. The value of x is _____ .

(see the figure above)

Q27. In the given circuit 'a' is an arbitrary constant. The value of m for which the equivalent circuit resistance is minimum, will be $\sqrt{\frac{x}{2}}$. The value of x is _____ .

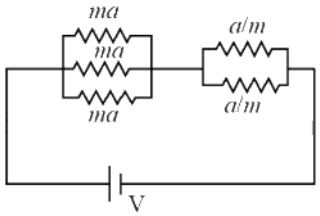

Numerical value type: the answer is a number.

Answer: 3. · Key from source paper

Q176 JEE Main 2022 · 26 Jun · Shift 1 MCQ

An aluminium wire is stretched to make its length, 0.4% larger. The percentage change in resistance is

(A) 0.4%
(B) 0.2%
(C) 0.8%
(D) 0.6%

Answer: (C) 0.8% · Key from source paper

Q177 JEE Main 2022 · 26 Jun · Shift 2 MCQ

Find the equivalent resistance between point A and B

(see the figure above)

Q12. Find the equivalent resistance between point A and B

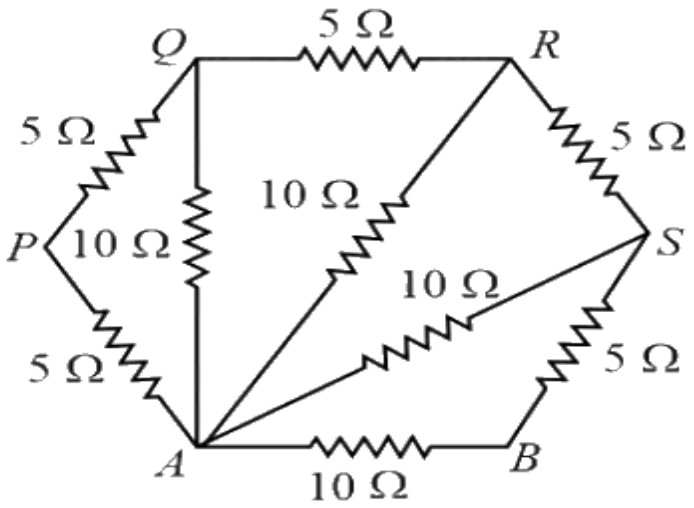

(1) 65 Ω
(2) 20 Ω
(3) 5 Ω
(4) 2 Ω

(A) 65Ω
(B) 20Ω
(C) 5Ω
(D) 2Ω

Answer: (C) 5Ω · Key from source paper

Q178 JEE Main 2022 · 25 Jun · Shift 1 MCQ

A teacher in his physics laboratory allotted an experiment to determine the resistance G a galvanometer. Students took the observations for $\frac{1}{3}$ deflection in the galvanometer. Which of the below is true for measuring value of G?

(A) $\frac{1}{3}$ deflection method cannot be used for determining the resistance of the galvanometer.
(B) $\frac{1}{3}$ deflection method can be used and in this case the G equals to twice the value of shunt resistance(s).
(C) $\frac{1}{3}$ deflection method can be used and in this case, the G equals to three times the value of shunt resistance(s).
(D) $\frac{1}{3}$ deflection method can be used and in this case the G value equals to the shunt resistance(s)

Answer: (B) $\frac{1}{3}$ deflection method can be used and in this case the G equals to twice the value of shunt resistance(s). · Key from source paper

---

Q179 JEE Main 2022 · 25 Jun · Shift 1 Numerical

A resistor develops $300\ \mathrm{J}$ of thermal energy in $15\ \mathrm{s}$, when a current of $2\ \mathrm{A}$ is passed through it. If the current increases to $3\ \mathrm{A}$, the energy developed in $10\ \mathrm{s}$ is _____ J.

Numerical value type: the answer is a number.

Answer: 450. · Key from source paper

Q180 JEE Main 2022 · 25 Jun · Shift 1 Numerical

The total current supplied to the circuit as shown in figure by the 5 V battery is _____ A.
(see the figure above)

Q29. The total current supplied to the circuit as shown in figure by the 5 V battery is _____ A.

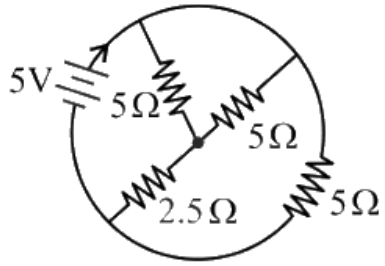

Numerical value type: the answer is a number.

Answer: 2. · Key from source paper

Q181 JEE Main 2022 · 25 Jun · Shift 2 MCQ

Two cells of the same EMF E but different internal resistances r_1 and r_2 are connected in series with an external resistance R as shown in the figure. The terminal potential difference across, the second cell is found to be zero. The external resistance R must then be:
(see the figure above)

Q9. Two cells of the same EMF E but different internal resistances r_1 and r_2 are connected in series with an external resistance R as shown in the figure. The terminal potential difference across, the second cell is found to be zero. The external resistance R must then be:

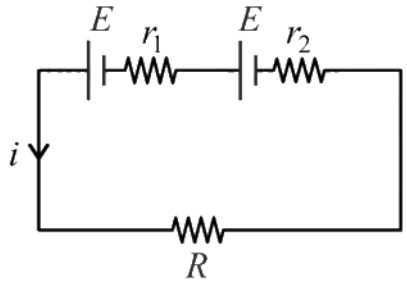

(1) r_1r_2
(2) $r_1 - r_2$
(3) $r_2 - r_1$
(4) $r_1 + r_2$

(A) r_1r_2
(B) $r_1 - r_2$
(C) $r_2 - r_1$
(D) $r_1 + r_2$

Answer: (C) $r_2 - r_1$ · Key from source paper

Q182 JEE Main 2022 · 25 Jun · Shift 2 MCQ

If n represents the actual number of deflections in a converted galvanometer of resistance G and shunt resistance S. Then the total current I when its figure of merit is K will be

(A) $\frac{KS}{S+G}$
(B) $\frac{G+S}{nKS}$
(C) $\frac{nKS}{G+S}$
(D) $\frac{nKG+S}{S}$

Answer: (D) $\frac{nKG+S}{S}$ · Key from source paper

Q183 JEE Main 2022 · 25 Jun · Shift 2 Numerical

The length of a given cylindrical wire is increased to double of its original length. The percentage increase in the resistance of the wire will be _____ $\%$

Numerical value type: the answer is a number.

Answer: 300. · Key from source paper

Q184 JEE Main 2022 · 24 Jun · Shift 1 MCQ

Two identical cells each of emf $1.5\ \mathrm{V}$ are connected in parallel across a parallel combination of two resistors each of resistance $20\,\Omega$. A voltmeter connected in the circuit measures $1.2\ \mathrm{V}$. The internal resistance of each cell is :

(A) $2.5\,\Omega$
(B) $4\,\Omega$
(C) $5\,\Omega$
(D) $10\,\Omega$

Answer: (C) $5\,\Omega$ · Key from source paper

Q185 JEE Main 2022 · 24 Jun · Shift 1 Numerical

In a potentiometer arrangement, a cell gives a balancing point at $75\ \mathrm{cm}$ length of wire. This cell is now replaced by another cell of unknown emf. If the ratio of the emf's of two cells respectively is $3:2$, the difference in the balancing length of the potentiometer wire in above two cases will be _____ cm.

Numerical value type: the answer is a number.

Answer: 25. · Key from source paper

Q186 JEE Main 2022 · 24 Jun · Shift 2 MCQ

What will be the most suitable combination of three resistors $A = 2\,\Omega$, $B = 4\,\Omega$, $C = 6\,\Omega$ so that $\left(\frac{22}{3}\right)\Omega$ is equivalent resistance of combination?

(A) Parallel combination of A and C connected in series with B
(B) Parallel combination of A and B connected in series with C
(C) Series combination of A and C connected in parallel with B.
(D) Series combination of B and C connected in parallel with A.

Answer: (B) Parallel combination of A and B connected in series with C · Key from source paper

---

Q187 JEE Main 2022 · 24 Jun · Shift 2 Numerical

A potentiometer wire of length $10\ \mathrm{m}$ and resistance $20\ \Omega$ is connected in series with a $25\ \mathrm{V}$ battery and an external resistance $30\ \Omega$. A cell of emf E in secondary circuit is balanced by $250\ \mathrm{cm}$ long potentiometer wire. The value of E (in volt) is $\frac{x}{10}$. The value of x is _____ .

Numerical value type: the answer is a number.

Answer: 25. · Key from source paper

Q188 JEE Main 2021 · 1 Sep · Shift 2 Numerical

A uniform heating wire of resistance $36\ \Omega$ is connected across a potential difference of 240 V. The wire is then cut into half and a potential difference of 240 V is applied across each half separately. The ratio of power dissipation in first case to the total power dissipation in the second case would be $1 : x$, where x is

Numerical value type: the answer is a number.

Answer: 4. · Key from source paper

Q189 JEE Main 2021 · 31 Aug · Shift 1 MCQ

Consider a galvanometer shunted with $5\ \Omega$ resistance and 2% of current passes through it. What is the resistance of the given galvanometer?

(A) $245\ \Omega$
(B) $344\ \Omega$
(C) $300\ \Omega$
(D) $226\ \Omega$

Answer: (A) $245\ \Omega$ · Key from source paper

Q190 JEE Main 2021 · 31 Aug · Shift 1 Numerical

The voltage drop across $15\ \Omega$ resistance in the given figure will be _____ V.
(see the figure above)

Q27. The voltage drop across 15 Ω resistance in the given figure will be _____ V.

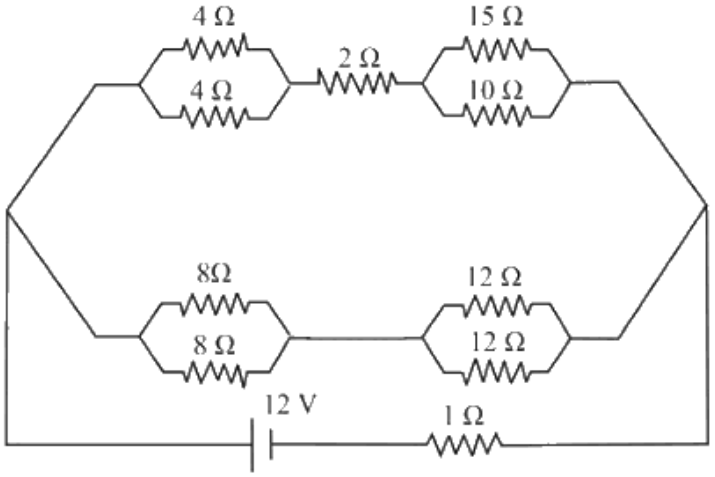

Numerical value type: the answer is a number.

Answer: 6. · Key from source paper

Q191 JEE Main 2021 · 31 Aug · Shift 1 · Numerical

A square-shaped wire with a resistance of each side 3 Ω is bent to form a complete circle. The resistance between two diametrically opposite points of the circle in a unit of Ω will be, _____.

Numerical value type: the answer is a number.

Answer: 3. · Key from source paper

Q192 JEE Main 2021 · 31 Aug · Shift 2 · MCQ

The equivalent resistance of the given circuit between the terminals A and B is :
(see the figure above)

Q13. The equivalent resistance of the given circuit between the terminals A and B is :

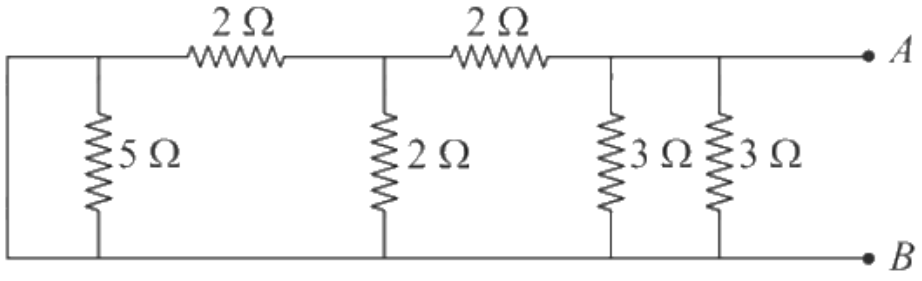

(1) 0 Ω
(2) $\frac{9}{2}$ Ω
(3) 3 Ω
(4) 1 Ω

(A) $0\ \Omega$
(B) $\frac{9}{2}\ \Omega$
(C) $3\ \Omega$
(D) $1\ \Omega$

Answer: (D) $1\ \Omega$ · Key from source paper

Q193 JEE Main 2021 · 31 Aug · Shift 2 Numerical

A resistor dissipates 192 J of energy in 1 s when a current of 4 A is passed through it. Now, when the current is doubled, the amount of thermal energy dissipated in 5 s is _____ J.

Numerical value type: the answer is a number.

Answer: 3840. · Key from source paper

Q194 JEE Main 2021 · 27 Aug · Shift 1 MCQ

Five identical cells each of internal resistance $1\ \Omega$ and emf 5 V are connected in series and in parallel with an external resistance R. For what value of R, current in series and parallel combination will remain the same?

(A) $1\ \Omega$
(B) $5\ \Omega$
(C) $25\ \Omega$
(D) $10\ \Omega$

Answer: (A) $1\ \Omega$ · Key from source paper

Q195 JEE Main 2021 · 27 Aug · Shift 1 Numerical

First, a set of n equal resistors of $10\ \Omega$ each are connected in series to a battery of E.M.F. 20 V and internal resistance $10\ \Omega$. A current I is observed to flow. Then, the n resistors are connected in parallel to the same battery. It is observed that the current is increased 20 times, then the value of n is _____.

Numerical value type: the answer is a number.

Answer: 20. · Key from source paper

Q196 JEE Main 2021 · 27 Aug · Shift 2 MCQ

The colour coding on a carbon resistor is shown in the given figure. The resistance value of the given resistor is:
(see the figure above)

Q13. The colour coding on a carbon resistor is shown in the given figure. The resistance value of the given resistor is:

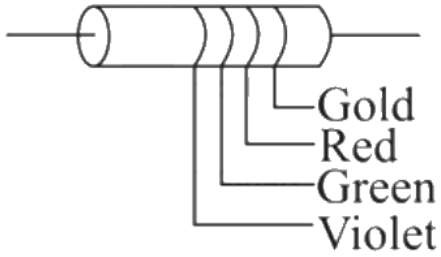

(1) $(7500 \pm 375)\Omega$
(2) $(5700 \pm 285)\Omega$
(3) $(7500 \pm 755)\Omega$
(4) $(5700 \pm 375)\Omega$

(A) $(7500 \pm 375)\Omega$
(B) $(5700 \pm 285)\Omega$
(C) $(7500 \pm 755)\Omega$
(D) $(5700 \pm 375)\Omega$

Answer: (A) $(7500 \pm 375)\Omega$ · Key from source paper

Q197 JEE Main 2021 · 27 Aug · Shift 2 Numerical

The ratio of the equivalent resistance of the network (shown in figure) between the points a and b when switch is open and switch is closed is $x : 8$. The value of x is

(see the figure above)

Q26. The ratio of the equivalent resistance of the network (shown in figure) between the points a and b when switch is open and switch is closed is $x : 8$. The value of x is

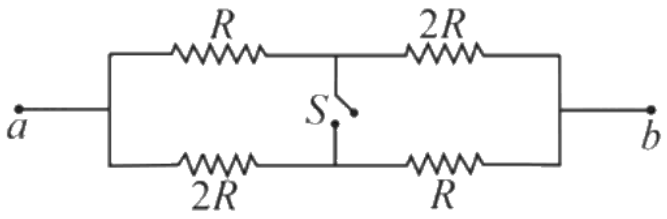

Numerical value type: the answer is a number.

Answer: 9. · Key from source paper

Q198 JEE Main 2021 · 26 Aug · Shift 1 MCQ

In the given figure, the emf of the cell is $2.2\ \text{V}$ and if internal resistance is $0.6\ \Omega$. Calculate the power dissipated in the whole circuit:

(see the figure above)

Q10. In the given figure, the emf of the cell is $2.2\ \text{V}$ and if internal resistance is $0.6\ \Omega$. Calculate the power dissipated in the whole circuit:

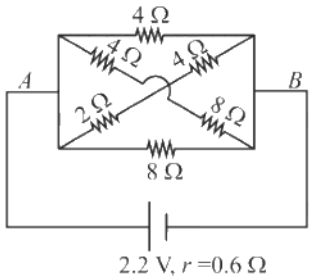

(1) $1.32\ \text{W}$
(2) $4\ .4\ \text{W}$
(3) $0.65\ \text{W}$
(4) $2.2\ \text{W}$

(A) $1.32\ \text{W}$
(B) $4.4\ \text{W}$
(C) $0.65\ \text{W}$
(D) $2.2\ \text{W}$

Answer: (D) $2.2\ \text{W}$ · Key from source paper

Q199 JEE Main 2021 · 26 Aug · Shift 1 MCQ

What equal length of an iron wire and a copper-nickel alloy wire, each of $2\ \text{mm}$ diameter connected parallel to give an equivalent resistance of $3\ \Omega$?
(Given resistivities of iron and copper-nickel alloy wire are $12\ \mu\Omega\ \text{cm}$ and $51\ \mu\Omega\ \text{cm}$ respectively)

(A) $97\ \text{m}$
(B) $110\ \text{m}$
(C) $90\ \text{m}$
(D) $82\ \text{m}$

Answer: (A) $97\ \text{m}$ · Key from source paper

Q200 JEE Main 2021 · 26 Aug · Shift 2 MCQ

An electric bulb of $500\ \text{W}$ at $100\ \text{V}$ is used in a circuit having a $200\ \text{V}$ supply. Calculate the resistance R to be connected in series with the bulb so that the power delivered by the bulb is $500\ \text{W}$.

(A) $30\ \Omega$
(B) $5\ \Omega$
(C) $20\ \Omega$
(D) $10\ \Omega$

Answer: (C) $20\ \Omega$ · Key from source paper

Q201 JEE Main 2021 · 26 Aug · Shift 2 MCQ

If you are provided a set of resistances, $2\ \Omega$, $4\ \Omega$, $6\ \Omega$ and $8\ \Omega$. Connect these resistances to obtain an equivalent resistance of $\frac{46}{3}\ \Omega$.

(A) $2\ \Omega$ and $6\ \Omega$ are in parallel with $4\ \Omega$ and $8\ \Omega$ in series
(B) $4\ \Omega$ and $6\ \Omega$ are in parallel with $2\ \Omega$ and $8\ \Omega$ in series
(C) $2\ \Omega$ and $4\ \Omega$ are in parallel with $6\ \Omega$ and $8\ \Omega$ in series
(D) $6\ \Omega$ and $8\ \Omega$ are in parallel with $2\ \Omega$ and $4\ \Omega$ in series

Answer: (C) $2\ \Omega$ and $4\ \Omega$ are in parallel with $6\ \Omega$ and $8\ \Omega$ in series · Key from source paper

Q202 JEE Main 2021 · 27 Jul · Shift 1 MCQ

In the given figure, a battery of emf E is connected across a conductor PQ of length l and different area of cross-sections having radii r_1 and $r_2 (r_2 < r_1)$.

(see the figure above)

Choose the correct option as one moves from P to Q.

Q16. In the given figure, a battery of emf E is connected across a conductor PQ of length l and different area of cross-sections having radii r_1 and $r_2 (r_2 < r_1)$.

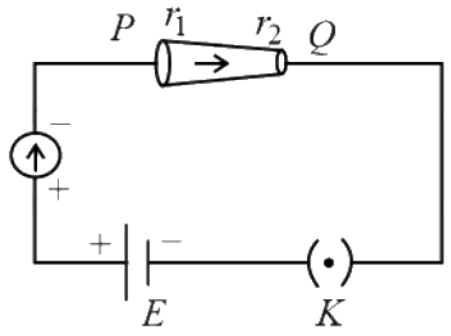

Choose the correct option as one moves from P to Q.

(1) Drift velocity of electron increases.
(2) Electric field decreases.
(3) Electron current decreases.
(4) All of these

(A) Drift velocity of electron increases.
(B) Electric field decreases.
(C) Electron current decreases.
(D) All of these

Answer: (A) Drift velocity of electron increases. · Key from source paper

Q203 JEE Main 2021 · 27 Jul · Shift 2 MCQ

The resistance of a conductor at 15°C is $16\ \Omega$ and at 100°C is $20\ \Omega$. What will be the temperature coefficient of resistance of the conductor?

(A) $0.010^{\circ}\mathrm{C}^{-1}$
(B) $0.033^{\circ}\mathrm{C}^{-1}$
(C) $0.003^{\circ}\mathrm{C}^{-1}$
(D) $0.042^{\circ}\mathrm{C}^{-1}$

Answer: (C) $0.003^{\circ}\mathrm{C}^{-1}$ · Key from source paper

Q204 JEE Main 2021 · 27 Jul · Shift 2 Numerical

For the circuit shown, the value of current at time $t = 3.2$ s will be _____ A.
(see the figure above)
[Voltage distribution V(t) is shown by Fig. (1) and the circuit is shown in Fig. (2)]

Q26. For the circuit shown, the value of current at time $t = 3.2$ s will be _____ A.

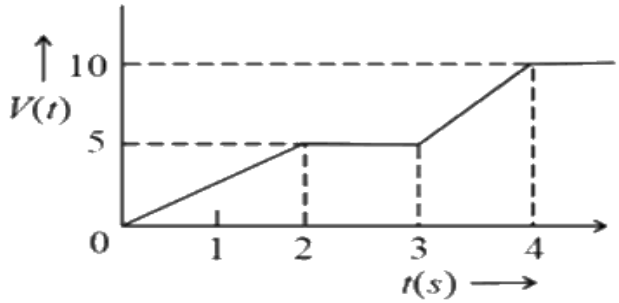

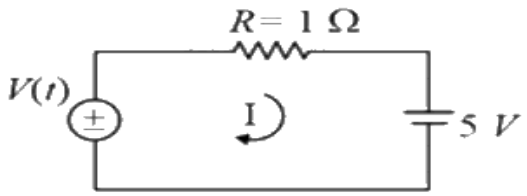

[Voltage distribution V(t) is shown by Fig. (1) and the circuit is shown in Fig. (2)]

Numerical value type: the answer is a number.

Answer: 1. · Key from source paper

Q205 JEE Main 2021 · 25 Jul · Shift 1 MCQ

In the given figure, there is a circuit of potentiometer of length $AB = 10$ m. The resistance per unit length is $0.1\ \Omega$ per cm. Across AB, a battery of emf E and internal resistance r is connected. The maximum value of emf measured by this potentiometer is:
(see the figure above)

Q11. In the given figure, there is a circuit of potentiometer of length $AB = 10$ m. The resistance per unit length is 0.1 Ω per cm. Across AB, a battery of emf E and internal resistance r is connected. The maximum value of emf measured by this potentiometer is:

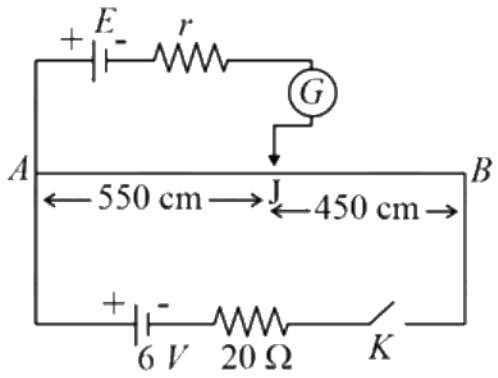

(1) 5 V
(2) 2.25 V
(3) 6 V
(4) 2.75 V

(A) 5 V
(B) 2.25 V
(C) 6 V
(D) 2.75 V

Answer: (A) 5 V · Key from source paper

Q206 JEE Main 2021 · 25 Jul · Shift 1 Numerical

An electric bulb rated as 200 W at 100 V is used in a circuit having 200 V supply. The resistance R that must be put in series with the bulb so that the bulb delivers the same power is _____ Ω.

Numerical value type: the answer is a number.

Answer: 50. · Key from source paper

Q207 JEE Main 2021 · 25 Jul · Shift 2 MCQ

In the given potentiometer circuit arrangement, the balancing length AC is measured to be 250 cm. When the galvanometer connection is shifted from point (1) to point (2) in the given diagram, the balancing length becomes 400 cm. The ratio of the emf of two cells $\frac{\varepsilon_1}{\varepsilon_2}$ is:

(see the figure above)

Q13. In the given potentiometer circuit arrangement, the balancing length AC is measured to be 250 cm. When the galvanometer connection is shifted from point (1) to point (2) in the given diagram, the balancing length becomes 400 cm. The ratio of the emf of two cells $\frac{\varepsilon_1}{\varepsilon_2}$ is:

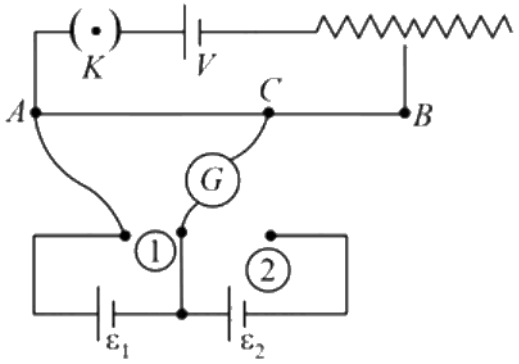

(1) $\frac{5}{3}$
(2) $\frac{8}{5}$
(3) $\frac{4}{3}$
(4) $\frac{3}{2}$

A $\frac{5}{3}$
B $\frac{8}{5}$
C $\frac{4}{3}$
D $\frac{3}{2}$

Answer: (A) $\frac{5}{3}$ · Key from source paper

Q208 JEE Main 2021 · 25 Jul · Shift 2 MCQ

The given potentiometer has its wire of resistance 10 Ω. When the sliding contact is in the middle of the potentiometer wire, the potential drop across 2 Ω resistor is:
(see the figure above)

Q14. The given potentiometer has its wire of resistance 10 Ω. When the sliding contact is in the middle of the potentiometer wire, the potential drop across 2 Ω resistor is:

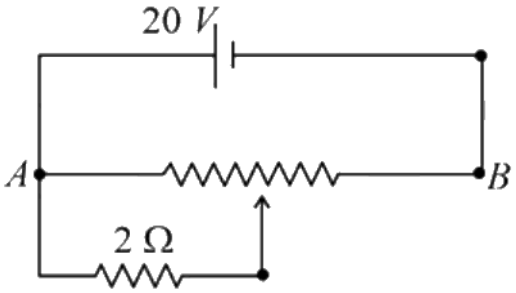

(1) 10 V
(2) 5 V
(3) $\frac{40}{9}$ V
(4) $\frac{40}{11}$ V

(A) $10\ \text{V}$
(B) $5\ \text{V}$
(C) $\frac{40}{9}\ \text{V}$
(D) $\frac{40}{11}\ \text{V}$

Answer: (C) $\frac{40}{9}\ \text{V}$ · Key from source paper

Q209 JEE Main 2021 · 25 Jul · Shift 2 Numerical

A $16\ \Omega$ wire is bent to form a square loop. A $9\ \text{V}$ supply having an internal resistance of $1\ \Omega$ is connected across one of its sides. The potential drop across the diagonals of the square loop is _____ $\times 10^{-1}\ \text{V}$.

Numerical value type: the answer is a number.

Answer: 45. · Key from source paper

Q210 JEE Main 2021 · 22 Jul · Shift 1 MCQ

A Copper (Cu) rod of length $25\ \text{cm}$ and cross-sectional area $3\ \text{mm}^2$ is joined with a similar Aluminium (Al) rod as shown in figure. Find the resistance of the combination between the ends A and B.
(Take resistivity of Copper $= 1.7 \times 10^{-8}\ \Omega\text{m}$, Resistivity of aluminium $= 2.6 \times 10^{-8}\ \Omega\text{m}$)
(see the figure above)

Q10. A Copper (Cu) rod of length 25 cm and cross-sectional area 3 mm^2 is joined with a similar Aluminium (Al) rod as shown in figure. Find the resistance of the combination between the ends A and B.
(Take resistivity of Copper $= 1.7 \times 10^{-8}\ \Omega\text{m}$, Resistivity of aluminium $= 2.6 \times 10^{-8}\ \Omega\text{m}$)

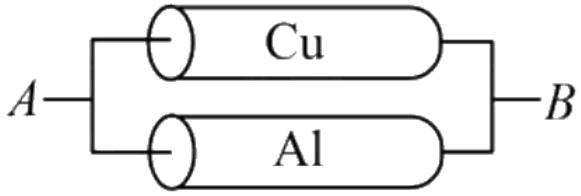

(1) $2.170\ \text{m}\Omega$
(2) $1.420\ \text{m}\Omega$
(3) $0.0858\ \text{m}\Omega$
(4) $0.858\ \text{m}\Omega$

(A) $2.170\ \text{m}\Omega$
(B) $1.420\ \text{m}\Omega$
(C) $0.0858\ \text{m}\Omega$
(D) $0.858\ \text{m}\Omega$

Answer: (D) $0.858\ \text{m}\Omega$ · Key from source paper

Q211 JEE Main 2021 · 22 Jul · Shift 1 Numerical

In an electric circuit, a call of certain emf provides a potential difference of $1.25\ \text{V}$ across a load resistance of $5\ \Omega$. However, it provides a potential difference of $1\ \text{V}$ across a load resistance of $2\ \Omega$ .The emf of the cell is given by $\frac{x}{10}\ \text{V}$. Then the value of x is _____ .

Numerical value type: the answer is a number.

Answer: 15. · Key from source paper

Q212 JEE Main 2021 · 20 Jul · Shift 1 MCQ

see figure

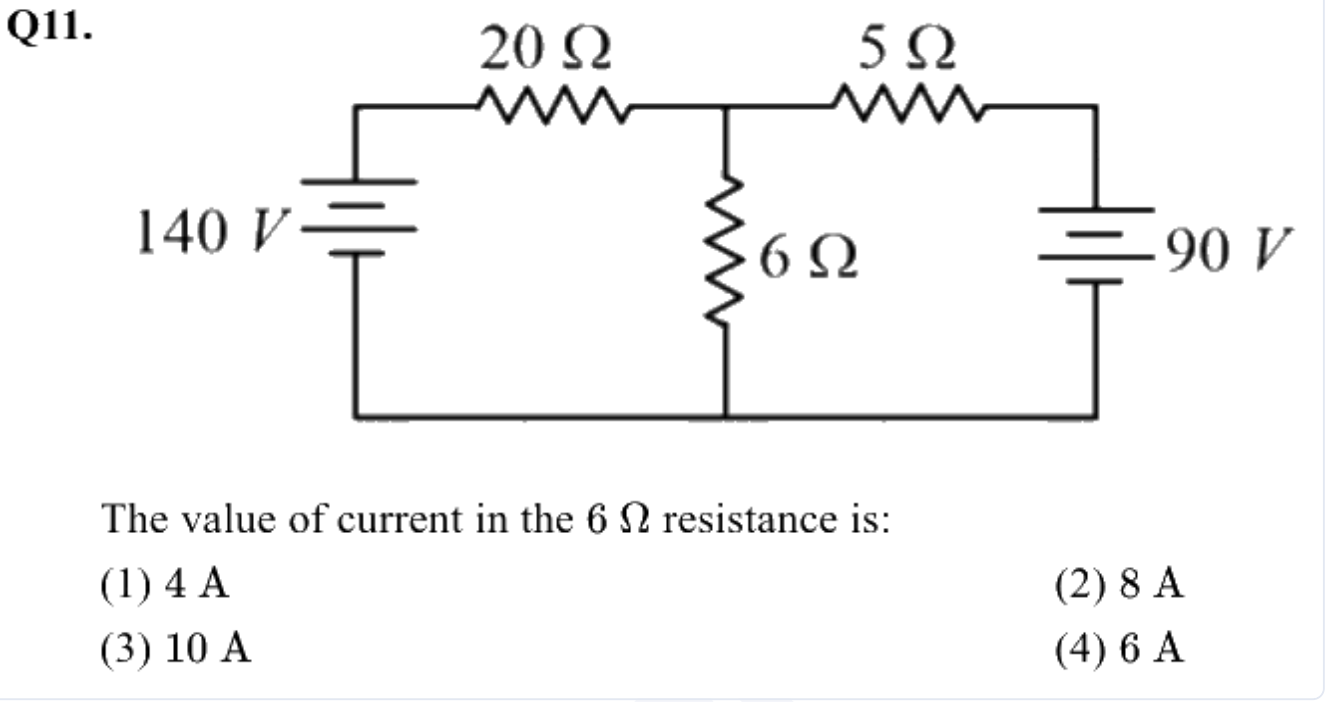

(A) $4\ \text{A}$
(B) $8\ \text{A}$
(C) $10\ \text{A}$
(D) $6\ \text{A}$

Answer: (C) $10\ \text{A}$ · Key from source paper

Q213 JEE Main 2021 · 20 Jul · Shift 1 MCQ

A current of $5\ \text{A}$ is passing through a non-linear magnesium wire of cross-section $0.04\ \text{m}^2$. At every point the direction of current density is at an angle of 60° with the unit vector of area of cross-section. The magnitude of electric field at every point of the conductor is: (resistivity of magnesium $\rho = 44 \times 10^{-8}\ \Omega\text{m}$)

(A) $11 \times 10^{-2}\ \text{V m}^{-1}$
(B) $11 \times 10^{-7}\ \text{V m}^{-1}$
(C) $11 \times 10^{-5}\ \text{V m}^{-1}$
(D) $11 \times 10^{-3}\ \text{V m}^{-1}$

Answer: (C) $11 \times 10^{-5}\ \text{V m}^{-1}$ · Key from source paper

Q214 JEE Main 2021 · 20 Jul · Shift 2 Numerical

In the given figure switches S_1 and S_2 are in open condition. The resistance across ab when the switches S_1 and S_2 are closed is _____ Ω.

(see the figure above)

Q25. In the given figure switches S_1 and S_2 are in open condition. The resistance across ab when the switches S_1 and S_2 are closed is _____ Ω.

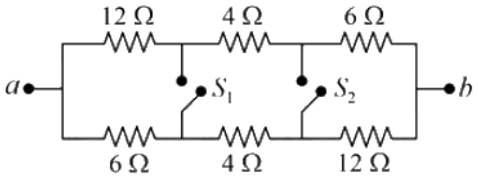

Numerical value type: the answer is a number.

Answer: 10. · Key from source paper

Q215 JEE Main 2021 · 18 Mar · Shift 1 Numerical

The voltage across the $10\ \Omega$ resistor in the given circuit is x volt.

(see the figure above)

The value of x to the nearest integer is _____ .

Q29. The voltage across the $10\ \Omega$ resistor in the given circuit is x volt.

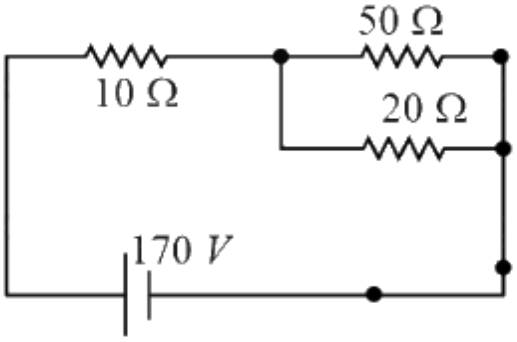

The value of x to the nearest integer is _____.

Numerical value type: the answer is a number.

Answer: 70. · Key from source paper

Q216 JEE Main 2021 · 18 Mar · Shift 2 Numerical

Consider a $72\ \text{cm}$ long wire AB as shown in the figure. The galvanometer jockey is placed at P on AB at a distance x cm from A. The galvanometer shows zero deflection.

(see the figure above)

The value of x, to the nearest integer, is _____

Q27. Consider a 72 cm long wire AB as shown in the figure. The galvanometer jockey is placed at P on AB at a distance x cm from A. The galvanometer shows zero deflection.

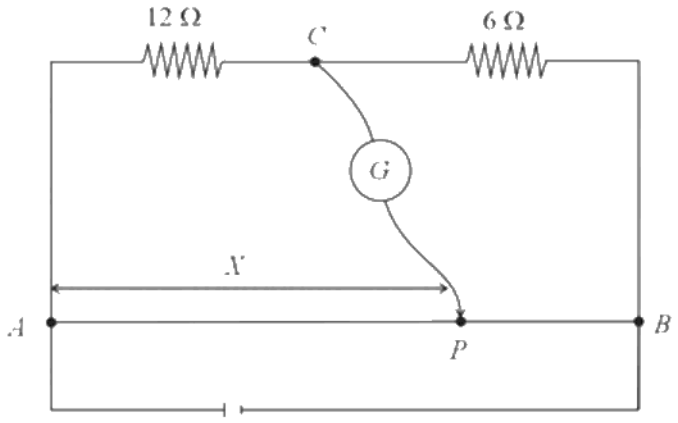

The value of x, to the nearest integer, is

Numerical value type: the answer is a number.

Answer: 48. · Key from source paper

Q217 JEE Main 2021 · 18 Mar · Shift 2 Numerical

Two wires of same length and thickness having specific resistances $6\ \Omega$ cm and $3\ \Omega$ cm respectively are connected in parallel. The effective resistivity is $\rho\ \Omega\text{cm}$. The value of ρ to the nearest integer, is _____ .

Numerical value type: the answer is a number.

Answer: 4. · Key from source paper

Q218 JEE Main 2021 · 17 Mar · Shift 1 MCQ

A current of $10\ \text{A}$ exists in a wire of cross-sectional area of $5\ \text{mm}^2$ with a drift velocity of $2 \times 10^{-3}\ \text{m s}^{-1}$. The number of free electrons in each cubic meter of the wire is

(A) 2×10^{6}

(B) 625×10^{25}

(C) 2×10^{25}

(D) 1×10^{23}

Answer: (B) 625×10^{25} · Key from source paper

Q219 JEE Main 2021 · 17 Mar · Shift 1 Numerical

The equivalent resistance of series combination of two resistors is s. When they are connected in parallel, the equivalent resistance is p. If $s = np$, then the minimum value for n is _____. (Round off to the Nearest Integer)

Numerical value type: the answer is a number.

Answer: 4. · Key from source paper

Q220 JEE Main 2021 · 17 Mar · Shift 2 MCQ

Two cells of emf $2E$ and E with internal resistance r_1 and r_2 respectively are connected in series to an external resistor R (see figure). The value of R, at which the potential difference across the terminals of the first cell becomes zero is

(see the figure above)

Q12. Two cells of emf $2E$ and E with internal resistance r_1 and r_2 respectively are connected in series to an external resistor R (see figure). The value of R, at which the potential difference across the terminals of the first cell becomes zero is

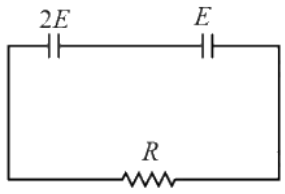

(1) $r_1 + r_2$
(2) $\frac{r_1}{2} - r_2$
(3) $\frac{r_1}{2} + r_2$
(4) $r_1 - r_2$

(A) $r_1 + r_2$
(B) $\frac{r_1}{2} - r_2$
(C) $\frac{r_1}{2} + r_2$
(D) $r_1 - r_2$

Answer: (B) $\frac{r_1}{2} - r_2$ · Key from source paper

Q221 JEE Main 2021 · 17 Mar · Shift 2 MCQ

The four arms of a Wheatstone bridge have resistances as shown in the figure. A galvanometer of 15Ω resistance is connected across BD. Calculate the current through the galvanometer when a potential difference of 10 V is maintained across AC.

(see the figure above)

Q13. The four arms of a Wheatstone bridge have resistances as shown in the figure. A galvanometer of 15Ω resistance is connected across BD. Calculate the current through the galvanometer when a potential difference of 10 V is maintained across AC.

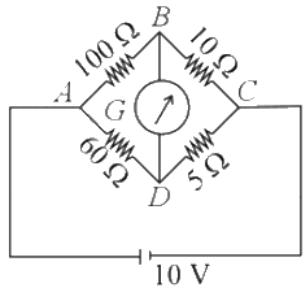

(1) 2.44μA
(2) 2.44 mA
(3) 4.87 mA
(4) 4.87μA

(A) 2.44μA
(B) 2.44 mA
(C) 4.87 mA
(D) 4.87μA

Answer: (C) 4.87 mA · Key from source paper

Q222 JEE Main 2021 · 16 Mar · Shift 1 MCQ

A conducting wire of length l, area of crosssection A and electric resistivity ρ is connected between the terminals of a battery. A potential difference V is developed between its ends, causing an electric current. If the length of the wire of the same material is doubled and the area of cross-section is halved, the resultant current would be _____

(A) $\frac{1}{4}\frac{VA}{\rho l}$
(B) $\frac{3}{4}\frac{VA}{\rho l}$
(C) $\frac{1}{4}\frac{\rho l}{VA}$
(D) $4\frac{VA}{\rho l}$

Answer: (A) $\frac{1}{4}\frac{VA}{\rho l}$ · Key from source paper

Q223 JEE Main 2021 · 16 Mar · Shift 1 Numerical

In the figure given, the electric current flowing through the $5\text{k}\Omega$ resistor is x mA.

(see the figure above)

The value of x to the nearest integer is _____.

Q25. In the figure given, the electric current flowing through the $5\ \text{k}\Omega$ resistor is $x\ \text{mA}$.

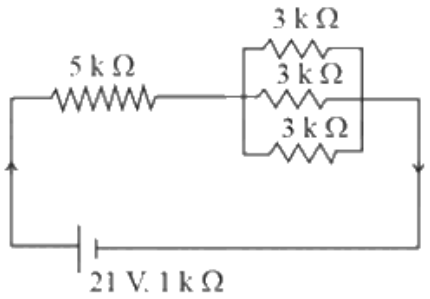

The value of x to the nearest integer is _____.

Numerical value type: the answer is a number.

Answer: 3. · Key from source paper

Q224 JEE Main 2021 · 16 Mar · Shift 2 MCQ

A resistor develops $500\ \text{J}$ of thermal energy in $20\ \text{s}$ when a current of $1.5\ \text{A}$ is passed through it. If the current is increased from $1.5\ \text{A}$ to $3\ \text{A}$, what will be the energy developed in $20\ \text{s}$.

(A) $1500\ \text{J}$
(B) $1000\ \text{J}$
(C) $500\ \text{J}$
(D) $2000\ \text{J}$

Answer: (D) $2000\ \text{J}$ · Key from source paper

Q225 JEE Main 2021 · 16 Mar · Shift 2 Numerical

The energy dissipated by a resistor is $10\ \text{mJ}$ in $1\ \text{s}$, when an electric current of $2\ \text{mA}$ flows through it. The resistance is _____ Ω. (Round off to the Nearest Integer)

Numerical value type: the answer is a number.

Answer: 2500. · Key from source paper

Q226 JEE Main 2021 · 26 Feb · Shift 1 MCQ

Five equal resistances are connected in a network as shown in figure. The net resistance between the points A and B is :

(see the figure above)

Q14. Five equal resistances are connected in a network as shown in figure. The net resistance between the points A and B is :

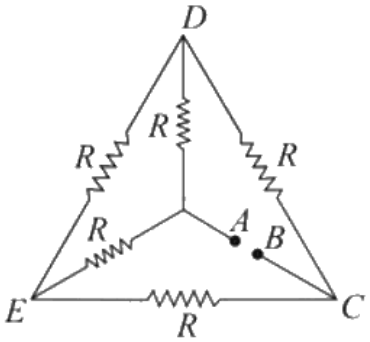

(1) R
(2) $\frac{R}{2}$
(3) $\frac{3R}{2}$
(4) $2R$

(A) R
(B) $\frac{R}{2}$
(C) $\frac{3R}{2}$
(D) $2R$

Answer: (A) R · Key from source paper

Q227 JEE Main 2021 · 26 Feb · Shift 1 Numerical

In an electrical circuit, a battery is connected to pass $20\ \mathrm{C}$ of charge through it in a certain given time. The potential difference between two plates of the battery is maintained at $15\ \mathrm{V}$. The workdone by the battery is _____ J

Numerical value type: the answer is a number.

Answer: 300. · Key from source paper

Q228 JEE Main 2021 · 26 Feb · Shift 2 MCQ

A wire of $1\ \Omega$ has a length of $1\ \mathrm{m}$. It is stretched till its length increases by 25%. The percentage change in resistance to the nearest integer is :

(A) 12.5%
(B) 76%
(C) 25%
(D) 56%

Answer: (D) 56% · Key from source paper

Q229 JEE Main 2021 · 25 Feb · Shift 1 Numerical

In the given circuit of potentiometer, the potential difference E across AB(10 m length) is larger than E_1 and E_2 as well. For key K_1 (closed), the jockey is adjusted to touch the wire at point J_1 so that there is no deflection in the galvanometer. Now the first battery (E_1) is replaced by second battery

(E_2) for working by making K_1 open and K_2 closed. The galvanometer gives then null deflection at J_2. The value of $\frac{E_1}{E_2}$ is $\frac{a}{2}$, where $a =$ _____.

(see the figure above)

Q27. In the given circuit of potentiometer, the potential difference E across AB(10 m length) is larger than E_1 and E_2 as well. For key K_1 (closed), the jockey is adjusted to touch the wire at point J_1 so that there is no deflection in the galvanometer. Now the first battery (E_1) is replaced by second battery (E_2) for working by making K_1 open and K_2 closed. The galvanometer gives then null deflection at J_2. The value of $\frac{E_1}{E_2}$ is $\frac{a}{2}$,

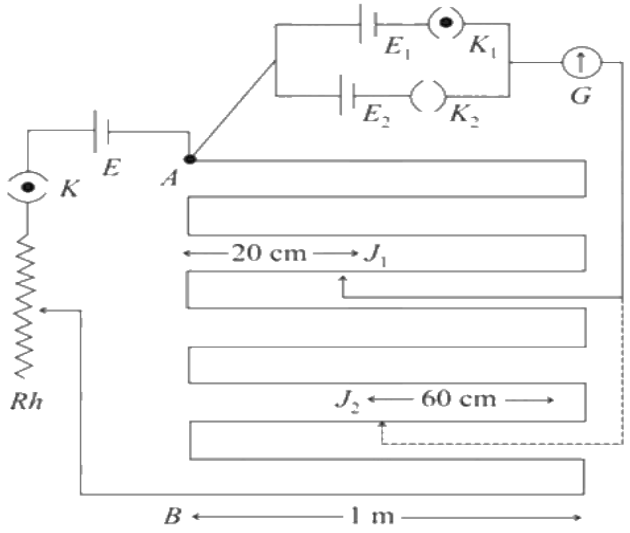

where $a =$_____ .

Numerical value type: the answer is a number.

Answer: 1. · Key from source paper

Q230 JEE Main 2021 · 25 Feb · Shift 2 Numerical

A current of 6 A enters one corner P of an equilateral triangle PQR having 3 wires of resistance 2 Ω each and leaves by the corner R. The currents i_1 in ampere is

(see the figure above)

Q29. A current of 6 A enters one corner P of an equilateral triangle PQR having 3 wires of resistance 2 Ω each and leaves by the corner R. The currents i_1 in ampere is

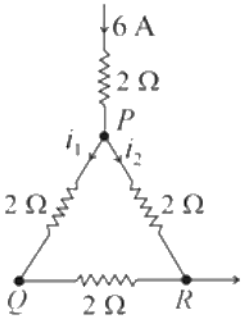

Numerical value type: the answer is a number.

Answer: 2. · Key from source paper

Q231 JEE Main 2021 · 24 Feb · Shift 1 MCQ

A current through a wire depends on time as $i = \alpha_0 t + \beta t^2$, where $\alpha_0 = 20\ \text{A s}^{-1}$ and $\beta = 8\ \text{A s}^{-2}$. Find the charge crossed through a section of the wire in $15\ \text{s}$.

(A) $2250\ \text{C}$
(B) $11250\ \text{C}$
(C) $2100\ \text{C}$
(D) $260\ \text{C}$

Answer: (B) $11250\ \text{C}$ · Key from source paper

Q232 JEE Main 2021 · 24 Feb · Shift 1 MCQ

A cell E_1 of emf $6\ \text{V}$ and internal resistance 2Ω is connected with another cell E_2 of emf $4\ \text{V}$ and internal resistance $8\ \Omega$ (as shown in the figure). The potential difference across points X and Y is:
(see the figure above)

Q15. A cell E_1 of emf 6 V and internal resistance 2Ω is connected with another cell E_2 of emf 4 V and internal resistance 8 Ω (as shown in the figure). The potential difference across points X and Y is:

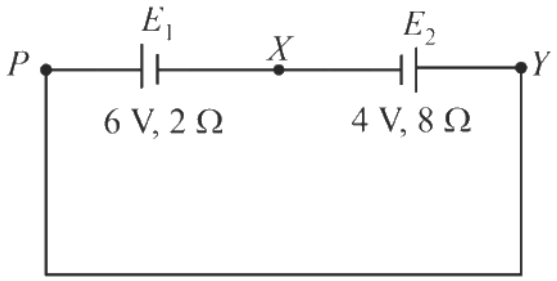

(1) 10.0 V
(2) 5.6 V
(3) 2.0 V
(4) 3.6 V

(A) $10.0\ \text{V}$
(B) $5.6\ \text{V}$
(C) $2.0\ \text{V}$
(D) $3.6\ \text{V}$

Answer: (B) $5.6\ \text{V}$ · Key from source paper

Q233 JEE Main 2021 · 24 Feb · Shift 2 Numerical

A cylindrical wire of radius $0.5\ \text{mm}$ and conductivity $5 \times 10^7\ \text{S m}^{-1}$ is subjected to an electric field of $10\ \text{mV m}^{-1}$. The expected value of current in the wire will be $x^3\pi$ mA. The value of x is _____.

Numerical value type: the answer is a number.

Answer: 5. · Key from source paper

Q234 JEE Main 2020 · 6 Sep · Shift 2 MCQ

In the figure shown, the current in the 10 V battery is close to :

(see the figure above)

Q13. In the figure shown, the current in the 10 V battery is close to :

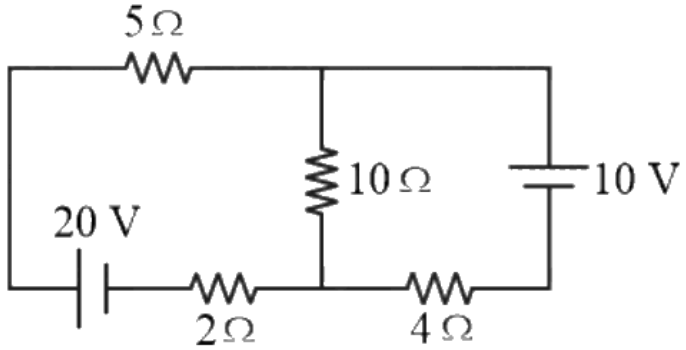

(1) 0.71 A from positive to negative terminal
(2) 0.42 A from positive to negative terminal
(3) 0.21 A from positive to negative terminal
(4) 0.36 A from negative to postive terminal

(A) 0.71 A from positive to negative terminal
(B) 0.42 A from positive to negative terminal
(C) 0.21 A from positive to negative terminal
(D) 0.36 A from negative to postive terminal (sic)

Answer: (C) 0.21 A from positive to negative terminal · Key from source paper

Q235 JEE Main 2020 · 5 Sep · Shift 1 MCQ

A galvanometer of resistance G is converted into a voltameter of range $0-1$ V by connecting a resistance R in series with it. The additional resistance that should be connected in series with R_1 to increase the range of the voltmeter to $0-2$V will be :

(A) G
(B) R_1
(C) $R_1 - G$
(D) $R_1 + G$

Answer: (D) $R_1 + G$ · Key from source paper

Q236 JEE Main 2020 · 5 Sep · Shift 2 MCQ

In the circuit, given in the figure currents in different branches and value of one resistor are shown. Then potential at point B with respect to the point A is:

(see the figure above)

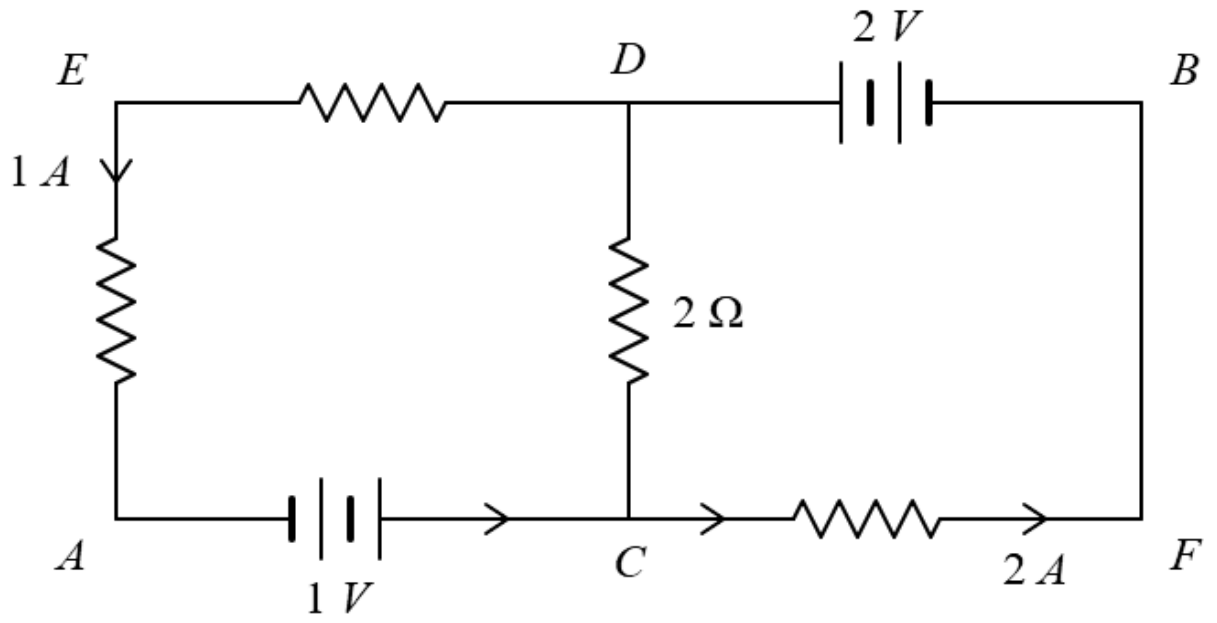

Figure redrawn by EdLoop

(A) $+2V$
(B) $-2V$
(C) $-1V$
(D) $+1V$

Answer: (D) $+1V$ · Key from source paper

Q237 JEE Main 2020 · 4 Sep · Shift 1 MCQ

A battery of 3.0 V is connected to a resistor dissipating 0.5 W of power. If the terminal voltage of the battery is 2.5 V, the power dissipated within the internal resistance is:

(A) 0.50 W
(B) 0.072 W
(C) 0.10 W
(D) 0.125 W

Answer: (C) 0.10 W · Key from source paper

Q238 JEE Main 2020 · 4 Sep · Shift 2 MCQ

The value of current i_1 flowing from A to C in the circuit diagram is :
(see the figure above)

Q13. The value of current i_1 flowing from A to C in the circuit diagram is :

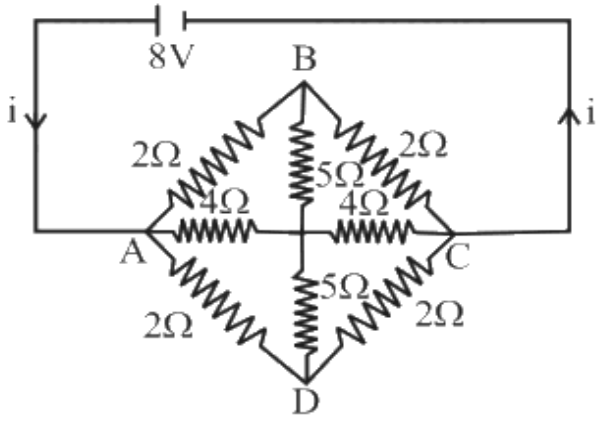

(1) 5 A
(2) 2.25 A
(3) 0.75 A
(4) 1 A

(A) 5 A
(B) 2.25 A
(C) 0.75 A
(D) 1 A

Answer: (D) 1 A · Key from source paper

Q239 JEE Main 2020 · 4 Sep · Shift 2 Numerical

Four resistance 40 Ω, 60 Ω, 90 Ω 110 Ω and make the arms of a quadrilateral $ABCD$. Across AC is a battery of emf 40 V and internal resistance negligible. The potential difference across BD in V is _____

(see the figure above)

Q23. Four resistance 40 Ω, 60 Ω, 90 Ω 110 Ω and make the arms of a quadrilateral $ABCD$. Across AC is a battery of emf 40 V and internal resistance negligible. The potential difference across BD in V is _____

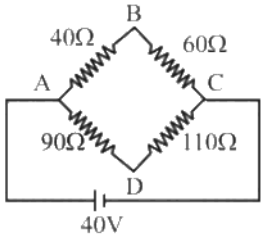

Numerical value type: the answer is a number.

Answer: 2. · Key from source paper

Q240 JEE Main 2020 · 3 Sep · Shift 1 MCQ

Model a torch battery of length l to be made up of a thin cylindrical bar of radius a and a concentric thin cylindrical shell of radius b filled in between with an electrolyte of resistivity ρ (see figure). If the battery is connected to a resistance of value R, the maximum Joule heating in R will take place for :
(see the figure above)

Q11. Model a torch battery of length l to be made up of a thin cylindrical bar of radius a and a concentric thin cylindrical shell of radius b filled in between with an electrolyte of resistivity ρ (see figure). If the battery is connected to a resistance of value R, the maximum Joule heating in R will take place for :

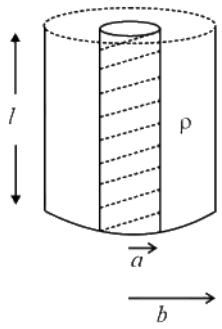

(1) $R = \frac{\rho}{2\pi\ell}\left(\frac{b}{a}\right)$
(2) $\mathrm{R} = \frac{\rho}{2\pi\ell}\ln\left(\frac{\mathrm{b}}{\mathrm{a}}\right)$
(3) $R = \frac{\rho}{\pi\ell} In\left(\frac{b}{a}\right)$
(4) $\mathrm{R} = \frac{2\rho}{\pi\ell}\ln\left(\frac{\mathrm{b}}{\mathrm{a}}\right)$

(A) $R = \frac{\rho}{2\pi\ell}\left(\frac{b}{a}\right)$
(B) $\mathrm{R} = \frac{\rho}{2\pi\ell}\ln\left(\frac{\mathrm{b}}{\mathrm{a}}\right)$
(C) $R = \frac{\rho}{\pi\ell} In\left(\frac{b}{a}\right)$
(D) $\mathrm{R} = \frac{2\rho}{\pi\ell}\ln\left(\frac{\mathrm{b}}{\mathrm{a}}\right)$

Answer: (B) $\mathrm{R} = \frac{\rho}{2\pi\ell}\ln\left(\frac{\mathrm{b}}{\mathrm{a}}\right)$ · Key from source paper

Q241 JEE Main 2020 · 3 Sep · Shift 2 MCQ

Two resistors $400\ \Omega$ and $800\ \Omega$ are connected in series across a $6\mathrm{V}$ battery. The potential difference measured by a voltmeter of $10\ \mathrm{k}\Omega$ across $400\ \Omega$ resistor is close to:

(A) $2\ \mathrm{V}$
(B) $1.8\ \mathrm{V}$
(C) $2.05\ \mathrm{V}$
(D) $1.95\ \mathrm{V}$

Answer: (D) $1.95\ \mathrm{V}$ · Key from source paper

Q242 JEE Main 2020 · 2 Sep · Shift 1 MCQ

Consider four conducing materials copper, tungsten, mercury and aluminum with resistivity ρ_{C}, ρ_{T}, ρ_{M} and ρ_{A} respectively. Then :

(A) $\rho_C > \rho_A > \rho_T$

(B) $\rho_M > \rho_A > \rho_C$

(C) $\rho_A > \rho_T > \rho_C$

(D) $\rho_A > \rho_M > \rho_C$

Answer: (B) $\rho_M > \rho_A > \rho_C$ · Key from source paper

Q243 JEE Main 2020 · 2 Sep · Shift 2 MCQ

A potentiometer wire PQ of 1m length is connected to a standard cell E_1. Another cell E_2 of emf $1.02\ \text{V}$ is connected with a resistance 'r' and switch S (as shown in figure). With switch S open, the null position is obtained at a distance of $49\ \text{cm}$ fromQ. The potential gradient in the potentiometer wire is :

(see the figure above)

Q11. A potentiometer wire PQ of 1m length is connected to a standard cell E_1. Another cell E_2 of emf $1.02\ \text{V}$ is connected with a resistance 'r' and switch S (as shown in figure). With switch S open, the null position is obtained at a distance of $49\ \text{cm}$ fromQ. The potential gradient in the potentiometer wire is :

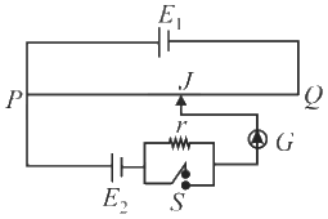

(1) $0.02\ \text{V/cm}$ (2) $0.01\ \text{V/cm}$

(3) $0.03\ \text{V/cm}$ (4) $0.04\ \text{V/cm}$

(A) $0.02\ \text{V/cm}$

(B) $0.01\ \text{V/cm}$

(C) $0.03\ \text{V/cm}$

(D) $0.04\ \text{V/cm}$

Answer: (A) $0.02\ \text{V/cm}$ · Key from source paper

Q244 JEE Main 2020 · 9 Jan · Shift 1 MCQ

In the given circuit diagram, a wire is joining points B and D. The current in this wire is:

(see the figure above)

Q12. In the given circuit diagram, a wire is joining points B and D. The current in this wire is:

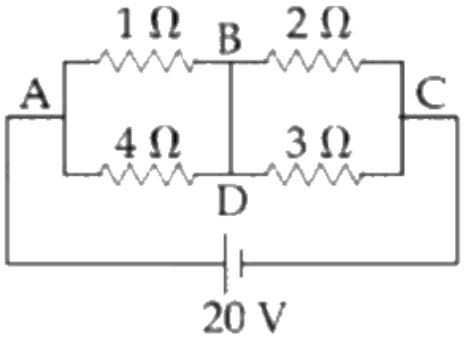

(1) 0.4A
(2) 2A
(3) 4A
(4) zero

(A) 0.4A
(B) 2A
(C) 4A
(D) zero

Answer: (B) 2A · Key from source paper

Q245 JEE Main 2020 · 9 Jan · Shift 2 Numerical

In a meter bridge experiment S is a standard resistance. R is a resistance wire. It is found that balancing length is $l = 25\text{cm}$. If R is replaced by a wire of hall (sic) length and half diameter that of R of same material, then the balancing distance l' (in cm) will now be _____.
(see the figure above)

Q23. In a meter bridge experiment S is a standard resistance. R is a resistance wire. It is found that balancing length is $l = 25\text{cm}$. If R is replaced by a wire of hall length and half diameter that of R of same material, then the balancing distance l' (in cm) will now be _____.

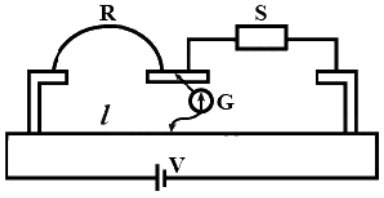

Numerical value type: the answer is a number.

Answer: 40. · Key from source paper

Q246 JEE Main 2020 · 8 Jan · Shift 1 MCQ

The length of a potentiometer wire is $1200\ \text{cm}$ and it carries a current of $60\ \text{mA}$ For a cell of emf $5\ \text{V}$ and internal resistance of $20\ \Omega$ the null point on it is found to be at $1000\ \text{cm}$ The resistance of whole wire is:

(A) 80Ω
(B) 120Ω
(C) 60Ω
(D) 100Ω

Answer: (D) 100Ω · Key from source paper

Q247 JEE Main 2020 · 8 Jan · Shift 1 Numerical

Four resistances of $15\ \Omega$, $12\ \Omega$, $4\ \Omega$ and $10\ \Omega$ respectively in cyclic order to form Wheatstone's network. The resistance that is to be connected in parallel with the resistance of $10\ \Omega$ to balance the network is _____ Ω.

Numerical value type: the answer is a number.

Answer: 10. · Key from source paper

Q248 JEE Main 2020 · 8 Jan · Shift 2 MCQ

A galvanometer having a coil resistance $100\ \Omega$ gives a full scale deflection when a current of $1\mathrm{mA}$ is passed through it. What is the value of the resistance which can convert this galvanometer into a voltmeter given full scale deflection for a potential difference of $10\mathrm{V}$?

(A) $10\mathrm{k}\Omega$
(B) $8.9\ \mathrm{k}\Omega$
(C) $7.9\ \mathrm{k}\Omega$
(D) $9.9\ \mathrm{k}\Omega$

Answer: (D) $9.9\ \mathrm{k}\Omega$ · Key from source paper

Q249 JEE Main 2020 · 8 Jan · Shift 2 Numerical

The series combination of two batteries, both of the same emf $10\mathrm{V}$, but different internal resistance of $20\ \Omega$ and $5\ \Omega$, is connected to the parallel combination of two resistors $30\ \Omega$ and $\mathrm{x}\ \Omega$. The voltage difference across the battery of internal resistance $20\ \Omega$ is zero, the value of x (in Ω) is____

Numerical value type: the answer is a number.

Answer: 30. · Key from source paper

Q250 JEE Main 2020 · 7 Jan · Shift 1 MCQ

The current I_1 (in A) flowing through 1Ω resistor in the following circuit is:
(see the figure above)

Q11. The current I_1 (in A) flowing through 1Ω resistor in the following circuit is:

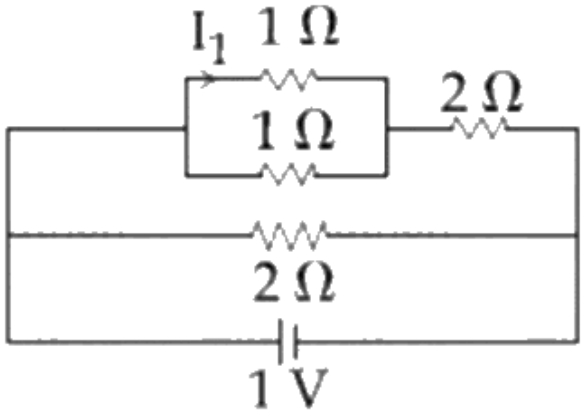

(1) 0.4
(2) 0.5
(3) 0.2
(4) 0.25

(A) 0.4
(B) 0.5
(C) 0.2
(D) 0.25

Answer: (C) 0.2 · Key from source paper

Q251 JEE Main 2020 · 7 Jan · Shift 2 MCQ

In a building there are 15 bulbs of $45\mathrm{W}$, 15 bulbs of $100\mathrm{W}$, 15 small fans of $10\mathrm{W}$ and 2 heaters of $1\mathrm{kW}$. The voltage of electric main supply is $220\mathrm{V}$. The minimum fuse capacity (rated value) of the building will be:

(A) $5\mathrm{A}$
(B) $25\mathrm{A}$
(C) $15\mathrm{A}$
(D) $20\mathrm{A}$

Answer: (D) $20\mathrm{A}$ · Key from source paper

Q252 JEE Main 2020 · 7 Jan · Shift 2 Numerical

The balancing length for a cell is $560\mathrm{cm}$ in a potentiometer experiment. When an external resistance of 10Ω is connected in parallel to the cell, the balancing length changes by $60\mathrm{cm}$. If the internal resistance of the cell is $\frac{n}{10}\Omega$, where n is an integer then value of n is _____

Numerical value type: the answer is a number.

Answer: 12. · Key from source paper

Q253 JEE Main 2019 · 12 Apr · Shift 1 MCQ

To verify Ohm's law, a student connects the voltmeter across the battery as shown in the figure. The measured voltage is plotted as a function of the current, and the following graph is obtained:
(see the figure above)
If V_o is almost zero, identify the correct statement:

Q17. To verify Ohm's law, a student connects the voltmeter across the battery as shown in the figure. The measured voltage is plotted as a function of the current, and the following graph is obtained:

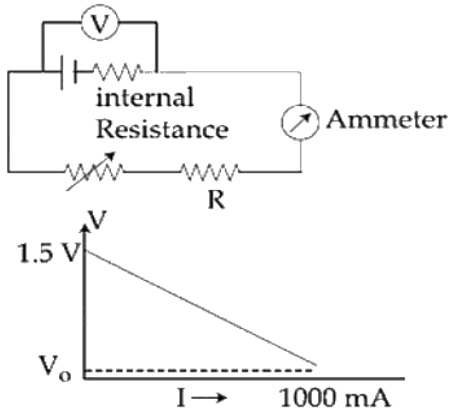

If V_o is almost zero, identify the correct statement:

(1) The emf of the battery is 1.5 V and its internal resistance is 1.5 Ω

(2) The value of the resistance R is 1.5 Ω

(3) The potential difference across the battery is 1.5 V when it sends a current of 1000 mA

(4) The emf of the battery is 1.5 V and the value of R is 1.5 Ω

(A) The emf of the battery is 1.5 V and its internal resistance is $1.5\ \Omega$

(B) The value of the resistance R is $1.5\ \Omega$

(C) The potential difference across the battery is 1.5 V when it sends a current of 1000 mA

(D) The emf of the battery is 1.5 V and the value of R is $1.5\ \Omega$

Answer: (A) The emf of the battery is 1.5 V and its internal resistance is $1.5\ \Omega$ · Key from source paper

Q254 JEE Main 2019 · 12 Apr · Shift 1 MCQ

A galvanometer of resistance $100\ \Omega$ has 50 divisions on its scale and has sensitivity of $20\mu\text{A}\ /\ \text{division}$. It is to be converted to voltmeter with three ranges, of $0-2\ \text{V}, 0-10\ \text{V}$ and $0-20\ \text{V}$. The appropriate circuit to do so is:

Q18. A galvanometer of resistance 100 Ω has 50 divisions on its scale and has sensitivity of 20μA / division . It is to be converted to voltmeter with three ranges, of 0 - 2 V, 0 - 10 V and 0 - 20 V. The appropriate circuit to do so is:

(1) 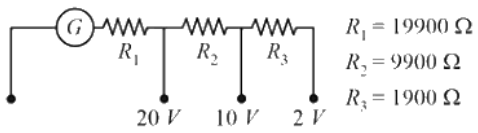

(2) 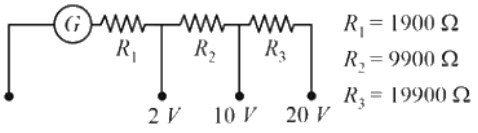

(3) 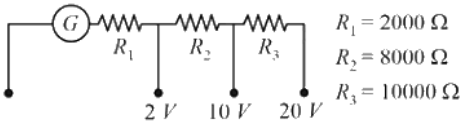

(4) 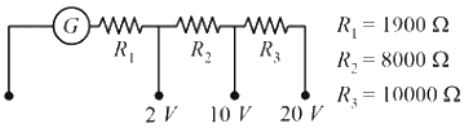

(A) *see figure*
(B) *see figure*
(C) *see figure*
(D) *see figure*

Answer: (D) · Key from source paper

Q255 JEE Main 2019 · 12 Apr · Shift 1 MCQ

The resistive network shown below is connected to a D.C. source of 16 V. The power consumed by the network is 4 Watt. The value of R is:
(see the figure above)

Q19. The resistive network shown below is connected to a D.C. source of 16 V. The power consumed by the network is 4 Watt. The value of R is:

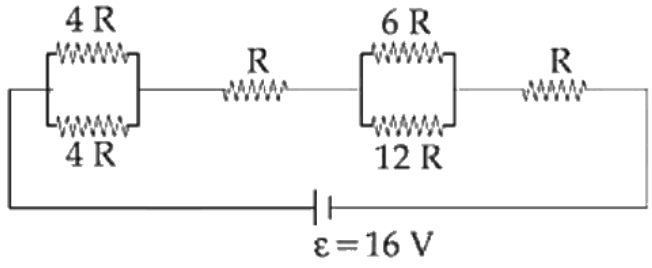

(1) 16 Ω
(2) 8 Ω
(3) 6 Ω
(4) 1 Ω

(A) 16 Ω
(B) 8 Ω
(C) 6 Ω
(D) 1 Ω

Answer: (B) 8 Ω · Key from source paper

Q256 JEE Main 2019 · 12 Apr · Shift 2 MCQ

A moving coil galvanometer, having a resistance G, produces full scale deflection when a current I_G flows through it. This galvanometer can be converted into (i) an ammeter of range 0 to $I_o(I_0 > I_g)$ by connecting a shunt resistance R_A to it and (ii) into a voltmeter of range 0 to $V(V = GI_0)$ by connecting a series resistance R_V to it. Then,

(A) $R_A R_V = G^2 \left(\frac{I_0 - I_g}{I_g}\right)$ and $\frac{R_A}{R_V} = \left(\frac{I_g}{(I_0 - I_g)}\right)^2$

(B) $R_A R_V = G^2$ and $\frac{R_A}{R_V} = \frac{I_g}{(I_0 - I_g)}$

(C) $R_A R_V = G^2 \left(\frac{I_g}{I_0 - I_g}\right)$ and $\frac{R_A}{R_V} = \left(\frac{I_0 - I_g}{I_g}\right)^2$

(D) $R_A R_V = G^2$ and $\frac{R_A}{R_V} = \left(\frac{I_g}{I_0 - I_g}\right)^2$

Answer: (D) $R_A R_V = G^2$ and $\frac{R_A}{R_V} = \left(\frac{I_g}{I_0 - I_g}\right)^2$ · Key from source paper

Q257 JEE Main 2019 · 10 Apr · Shift 1 MCQ

A current of 5 A passes through a copper conductor (resistivity $= 1.7 \times 10^{-8}\ \Omega\ m$) of radius of cross-section 5 mm . Find the mobility of the charges if their drift velocity is $1.1 \times 10^{-3}\ ms^{-1}$.

(A) $1.5\ m^2\ V^{-1}\ s^{-1}$

(B) $1.8\ m^2\ V^{-1}\ s^{-1}$

(C) $1.0\ m^2\ V^{-1}\ s^{-1}$

(D) $1.3\ m^2\ V^{-1}\ s^{-1}$

Answer: (C) $1.0\ m^2\ V^{-1}\ s^{-1}$ · Key from source paper

Q258 JEE Main 2019 · 10 Apr · Shift 1 MCQ

In the given circuit, an ideal voltmeter connected across the $10\ \Omega$ resistance reads $2\ V$. The internal resistance r , of each cell is:

(see the figure above)

EdLoop JEE

Q16. In the given circuit, an ideal voltmeter connected across the $10\ \Omega$ resistance reads $2\ \text{V}$. The internal resistance r, of each cell is:

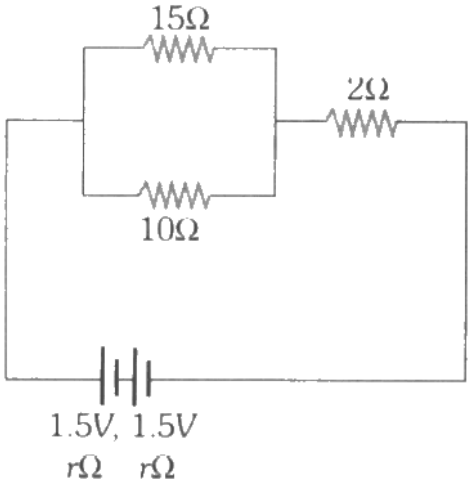

(1) $0\ \Omega$
(2) $1.5\ \Omega$
(3) $0.5\ \Omega$
(4) $1\ \Omega$

(A) $0\ \Omega$
(B) $1.5\ \Omega$
(C) $0.5\ \Omega$
(D) $1\ \Omega$

Answer: (C) $0.5\ \Omega$ · Key from source paper

Q259 JEE Main 2019 · 10 Apr · Shift 1 MCQ

A moving coil galvanometer allows a full scale current of $10^{-4}\ \text{A}$. A series resistance of $2 \times 10^4\ \Omega$ is required to convert the galvanometer into a voltmeter of range $0 - 5\ \text{V}$. Therefore, the value of shunt resistance required to convert the above galvanometer into an ammeter of range $0 - 10\ \text{mA}$ is:

(A) $100\ \Omega$
(B) $200\ \Omega$
(C) $300\ \Omega$
(D) $10\ \Omega$

Answer: (C) $300\ \Omega$ · Key from source paper

Q260 JEE Main 2019 · 10 Apr · Shift 1 MCQ

In an experiment, the resistance of a material is plotted as a function of temperature (in some range). As shown in the figure, it is a straight line.

(see the figure above)

One may conclude that

Q18. In an experiment, the resistance of a material is plotted as a function of temperature (in some range). As shown in the figure, it is a straight line.

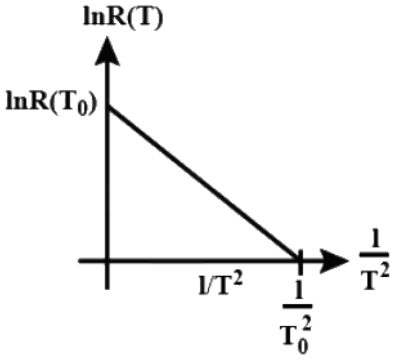

One may conclude that

(1) $\mathrm{R(T)} = \mathrm{R_0 e^{T^2/T_0^2}}$

(2) $\mathrm{R(T)} = \frac{\mathrm{R_0}}{\mathrm{T^2}}$

(3) $\mathrm{R(T)} = \mathrm{R_0 e^{-T^2/T_0^2}}$

(4) $\mathrm{R(T)} = \mathrm{R_0 e^{-T_0^2/T^2}}$

(A) $R(T) = R_0 e^{T^2/T_0^2}$

(B) $R(T) = \frac{R_0}{T^2}$

(C) $R(T) = R_0 e^{-T^2/T_0^2}$

(D) $R(T) = R_0 e^{-T_0^2/T^2}$

Answer: (D) $R(T) = R_0 e^{-T_0^2/T^2}$ · Key from source paper

Q261 JEE Main 2019 · 10 Apr · Shift 2 MCQ

Space between two concentric conducting spheres of radii a and b $(b > a)$ is filled with a medium of resistivity ρ. The resistance between the two spheres will be:

(A) $\frac{\rho}{4\pi}\left(\frac{1}{a} + \frac{1}{b}\right)$

(B) $\frac{\rho}{2\pi}\left(\frac{1}{a} + \frac{1}{b}\right)$

(C) $\frac{\rho}{4\pi}\left(\frac{1}{a} - \frac{1}{b}\right)$

(D) $\frac{\rho}{2\pi}\left(\frac{1}{a} - \frac{1}{b}\right)$

Answer: (C) $\frac{\rho}{4\pi}\left(\frac{1}{a} - \frac{1}{b}\right)$ · Key from source paper

Q262 JEE Main 2019 · 9 Apr · Shift 1 MCQ

A wire of resistance R is bent to form a square $ABCD$ as shown in the figure. The effective resistance between E and C is: (E is mid-point of arm CD)

(see the figure above)

Q18. A wire of resistance R is bent to form a square $ABCD$ as shown in the figure. The effective resistance between E and C is:

(E is mid-point of arm CD)

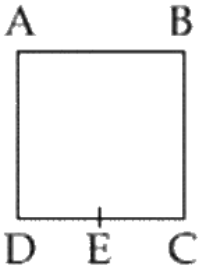

(1) R
(2) $\frac{7}{64}R$
(3) $\frac{1}{16}R$
(4) $\frac{3}{4}R$

(A) R
(B) $\frac{7}{64}R$
(C) $\frac{1}{16}R$
(D) $\frac{3}{4}R$

Answer: (B) $\frac{7}{64}R$ · Key from source paper

Q263 JEE Main 2019 · 9 Apr · Shift 1 MCQ

A moving coil galvanometer has resistance 50 Ω and it indicates full deflection at 4 mA current. A voltmeter is made using this galvanometer and a 5 kΩ resistance. The maximum voltage, that can be measured using this voltmeter, will be close to:

(A) 40 V
(B) 15 V
(C) 20 V
(D) 10 V

Answer: (C) 20 V · Key from source paper

Q264 JEE Main 2019 · 9 Apr · Shift 2 MCQ

A metal wire of resistance 3 Ω is elongated to make a uniform wire of double its previous length. This new wire is now bent and the ends joined to make a circle. If two points on this circle make an angle 60° at the center, the equivalent resistance between these two points will be:

(A) $\frac{5}{3}\ \Omega$
(B) $\frac{12}{5}\ \Omega$
(C) $\frac{7}{2}\ \Omega$
(D) $\frac{5}{2}\ \Omega$

Answer: (A) $\frac{5}{3}\ \Omega$ · Key from source paper

Q265 JEE Main 2019 · 9 Apr · Shift 2 MCQ

The resistance of a galvanometer is 50 ohm and the maximum current which can be passed through it is 0.002 A. What resistance must be connected to it in order to convert it into an ammeter of range 0 - 0.5 A?

(A) 0.2 ohm
(B) 0.5 ohm
(C) 0.002 ohm
(D) 0.02 ohm

Answer: (A) 0.2 ohm · Key from source paper

Q266 JEE Main 2019 · 9 Apr · Shift 2 MCQ

In a conductor, if the number of conduction electrons per unit volume is $8.5 \times 10^{28}\ \mathrm{m}^{-3}$ and mean free time is 25 fs (femto second), it's approximate resistivity is: ($\mathrm{m_e}$ = 9.1×10^{-31} kg)

(A) $10^{-7}\ \Omega\,\mathrm{m}$
(B) $10^{-6}\ \Omega\,\mathrm{m}$
(C) $10^{-5}\ \Omega\,\mathrm{m}$
(D) $10^{-8}\ \Omega\,\mathrm{m}$

Answer: (D) $10^{-8}\ \Omega\,\mathrm{m}$ · Key from source paper

---

Q267 JEE Main 2019 · 8 Apr · Shift 1 MCQ

For the circuit shown, with $R_1 = 1.0\ \Omega$, $R_2 = 2.0\ \Omega$, $E_1 = 2$ V and $E_2 = E_3 = 4$ V, the potential difference between the points 'a' and 'b' is approximately (in V):

(see the figure above)

Q17. For the circuit shown, with $R_1 = 1.0\ \Omega$, $R_2 = 2.0\ \Omega$, $E_1 = 2\ \text{V}$ and $E_2 = E_3 = 4\ \text{V}$, the potential difference between the points 'a' and 'b' is approximately (in V):

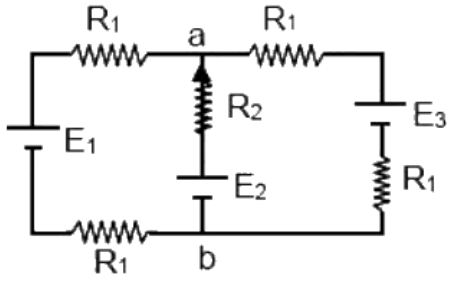

(1) 3.3 (2) 2.3 (3) 2.7 (4) 3.7

(A) 3.3
(B) 2.3
(C) 2.7
(D) 3.7

Answer: (A) 3.3 · Key from source paper

Q268 JEE Main 2019 · 8 Apr · Shift 1 MCQ

A 200 Ω resistor has certain colour code. If one replaced the red colour by green in the code, the new resistance will be:

(A) 300 Ω
(B) 100 Ω
(C) 400 Ω
(D) 500 Ω

Answer: (D) 500 Ω · Key from source paper

Q269 JEE Main 2019 · 8 Apr · Shift 2 MCQ

In the circuit shown, a four-wire potentiometer is made of a 400 cm long wire, which extends between A and B . The resistance per unit length of the potentiometer wire is r = 0.01 Ω / cm . If an ideal voltmeter is connected as shown with jockey J at 50 cm from end A , the expected reading of the voltmeter will be:

(see the figure above)

Q18. In the circuit shown, a four-wire potentiometer is made of a 400 cm long wire, which extends between A and B . The resistance per unit length of the potentiometer wire is $r = 0.01\ \Omega / cm$. If an ideal voltmeter is

connected as shown with jockey J at 50 cm from end A , the expected reading of the voltmeter will be:

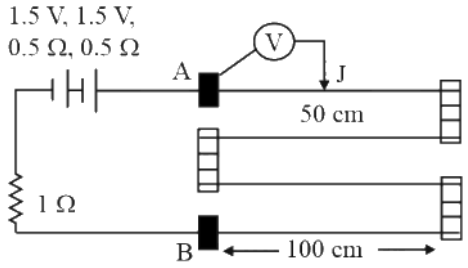

(1) 0.50 V
(2) 0.25 V
(3) 0.75 V
(4) 0.20 V

(A) 0.50 V
(B) 0.25 V
(C) 0.75 V
(D) 0.20 V

Answer: (B) 0.25 V · Key from source paper

Q270 JEE Main 2019 · 8 Apr · Shift 2 MCQ

A cell of internal resistance r drives current through an external resistance R. The power delivered by the cell to the external resistance will be maximum when:

(A) R = 2r
(B) R = r
(C) R = 1000 r
(D) R = 0.001 r

Answer: (B) R = r · Key from source paper

Q271 JEE Main 2019 · 8 Apr · Shift 2 MCQ

In the figure shown, what is the current (in Ampere) drawn from the battery? You are given: R_1 = 15 Ω , R_2 = 10 Ω , R_3 = 20 Ω , R_4 = 5 Ω , R_5 = 25 Ω , R_6 = 30 Ω , E = 15 V

(see the figure above)

Q20. In the figure shown, what is the current (in Ampere) drawn from the battery? You are given:
$R_1 = 15\ \Omega$, $R_2 = 10\ \Omega$, $R_3 = 20\ \Omega$, $R_4 = 5\ \Omega$, $R_5 = 25\ \Omega$, $R_6 = 30\ \Omega$, $E = 15$ V

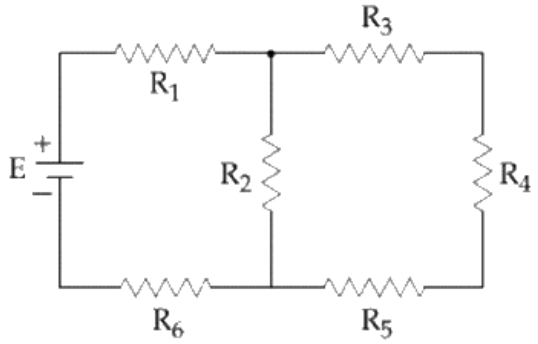

(1) 9 / 32
(2) 7 / 18
(3) 13 / 24
(4) 20 / 3

(A) 9 / 32
(B) 7 / 18
(C) 13 / 24
(D) 20 / 3

Answer: (A) 9 / 32 · Key from source paper

Q272 JEE Main 2019 · 12 Jan · Shift 1 MCQ

The galvanometer deflection, when key K_1 is closed but K_2 is open, equals θ_0 (see figure). On closing K_2 also and adjusting R_2 to 5Ω, the deflection in galvanometer becomes $\frac{\theta_0}{5}$. The resistance of the galvanometer is, then, given by [Neglect the internal resistance of battery]:

(see the figure above)

Q16. The galvanometer deflection, when key K_1 is closed but K_2 is open, equals θ_0 (see figure). On closing K_2 also and adjusting R_2 to 5Ω, the deflection in galvanometer becomes $\frac{\theta_0}{5}$. The resistance of the galvanometer is, then, given by [Neglect the internal resistance of battery]:

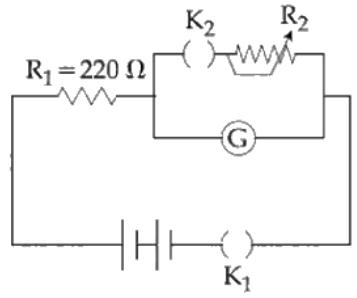

(1) $12\ \Omega$
(2) $22\ \Omega$
(3) $5\ \Omega$
(4) $25\ \Omega$

(A) $12\ \Omega$
(B) $22\ \Omega$
(C) $5\ \Omega$
(D) $25\ \Omega$

Answer: (B) $22\ \Omega$ · Key from source paper

Q273 JEE Main 2019 · 12 Jan · Shift 1 MCQ

An ideal battery of emf $4V$ and resistance R are connected in series in the primary circuit of a potentiometer of length 1 m and resistance 5 Ω. The value of R, to give a potential difference of 5 mV across 10 cm of potentiometer wire, is:

(A) 480 Ω
(B) 495 Ω
(C) 395 Ω
(D) 490 Ω

Answer: (C) 395 Ω · Key from source paper

Q274 JEE Main 2019 · 12 Jan · Shift 1 MCQ

Two electric bulbs, rated at (25 W, 220 V) and (100 W, 220 V), are connected in series across a 220 V voltage source. If the 25 W and 100 W bulbs draw powers P_1 and P_2 respectively, then:

(A) $P_1 = 4$ W, $P_2 = 16$ W
(B) $P_1 = 9$ W, $P_2 = 16$ W
(C) $P_1 = 16$ W, $P_2 = 9$ W
(D) $P_1 = 16$ W, $P_2 = 4$ W

Answer: (D) $P_1 = 16$ W, $P_2 = 4$ W · Key from source paper

---

Q275 JEE Main 2019 · 12 Jan · Shift 1 MCQ

In a meter bridge, the wire of length 1 m has a non-uniform cross-section such that, the variation $\frac{dR}{dl}$ of its resistance R with length l is $\frac{dR}{dl} \propto \frac{1}{\sqrt{l}}$. Two equal resistances are connected as shown in the figure. The galvanometer has zero deflection when the jockey is at point P. What is the length AP?

(see the figure above)

Q30. In a meter bridge, the wire of length 1 m has a non-uniform cross-section such that, the variation $\frac{dR}{dl}$ of its resistance R with length l is $\frac{dR}{dl} \propto \frac{1}{\sqrt{l}}$. Two equal resistances are connected as shown in the figure. The galvanometer has zero deflection when the jockey is at point P. What is the length AP?

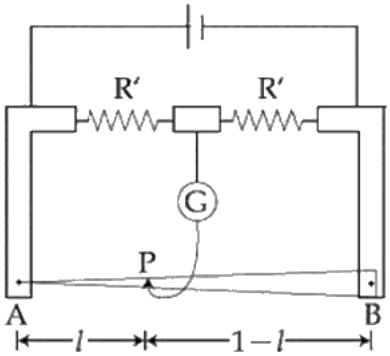

(1) 0.2 m
(2) 0.35 m
(3) 0.3 m
(4) 0.25 m

(A) 0.2 m
(B) 0.35 m
(C) 0.3 m
(D) 0.25 m

Answer: (D) 0.25 m · Key from source paper

Q276 JEE Main 2019 · 12 Jan · Shift 2 MCQ

The charge on a capacitor plate in a circuit, as a function of time, is shown in the figure:

(see the figure above)

What is the value of current at $t = 4\ s$?

Q16. The charge on a capacitor plate in a circuit, as a function of time, is shown in the figure:

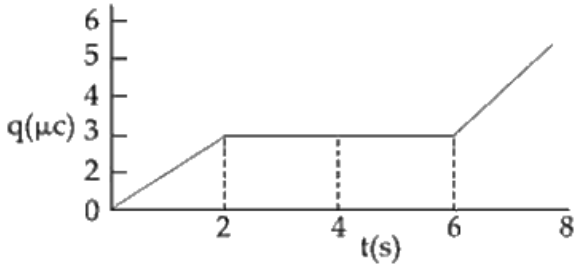

What is the value of current at $t = 4\ s$?

(1) 1.5 μA
(2) $2\mu A$
(3) Zero
(4) $3\mu A$

(A) $1.5\ \mu A$
(B) $2\mu A$
(C) Zero
(D) $3\mu A$

Answer: (C) Zero · Key from source paper

Q277 JEE Main 2019 · 12 Jan · Shift 2 MCQ

A galvanometer, whose resistance is 50 ohm, has 25 divisions in it. When a current of 4×10^{-4} A passes through it, its needle (pointer) deflects by one division. To use this galvanometer as a voltmeter of range 2.5 V it should be connected to a resistance of:

(A) 6250 ohm
(B) 250 ohm
(C) 6200 ohm
(D) 200 ohm

Answer: (D) 200 ohm · Checked by our team

Q278 JEE Main 2019 · 12 Jan · Shift 2 MCQ

In the given circuit diagram, the currents, $I_1 = -0.3\ A$, $I_4 = 0.8\ A$ and $I_5 = 0.4\ A$, are flowing as shown. The currents I_2, I_3 and I_6, respectively, are:

(see the figure above)

Q18. In the given circuit diagram, the currents, $I_1 = -0.3\,A$, $I_4 = 0.8\,A$ and $I_5 = 0.4\,A$, are flowing as shown. The currents I_2, I_3 and I_6, respectively, are:

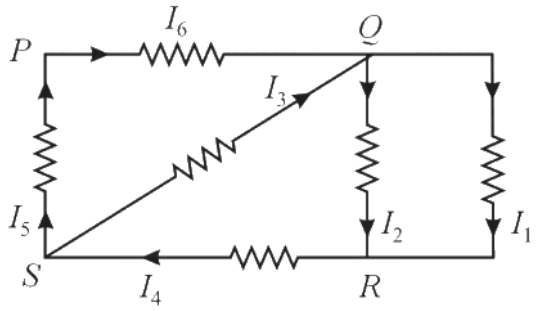

(1) $0.4A, 1.1A, 0.4A$
(2) $1.1A, -0.4A, 0.4A$
(3) $1.1A, 0.4A, 0.4A$
(4) $-0.4A, 0.4A, 1.1A$

(A) $0.4A, 1.1A, 0.4A$
(B) $1.1A, -0.4A, 0.4A$
(C) $1.1A, 0.4A, 0.4A$
(D) $-0.4A, 0.4A, 1.1A$

Answer: (C) $1.1A, 0.4A, 0.4A$ · Key from source paper

Q279 JEE Main 2019 · 11 Jan · Shift 1 MCQ

Two equal resistances when connected in series to a battery, consume electric power of 60 W. If these resistance are now connected in parallel combination to the same battery, the electric power consumed will be :

(A) 60 W
(B) 240 W
(C) 120 W
(D) 30 W

Answer: (B) 240 W · Key from source paper

Q280 JEE Main 2019 · 11 Jan · Shift 1 MCQ

In a Wheatstone bridge (see fig.), Resistances P and Q are approximatelyequal. When R = 400Ω, the bridge is balanced. On interchanging P and Q, the value of R, for balance, is 405Ω. The value of Y is close to

(see the figure above)

Q18. In a Wheatstone bridge (see fig.), Resistances P and Q are approximatelyequal. When $R = 400\Omega$, the bridge is balanced. On interchanging P and Q, the value of R, for balance, is 405Ω. The value of Y is close to

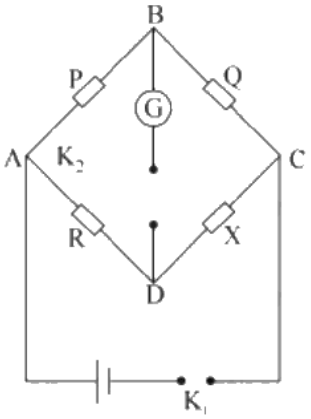

(1) 401.5ohm
(2) 404.5ohm
(3) 403.5ohm
(4) 402.5ohm

(A) 401.5ohm
(B) 404.5ohm
(C) 403.5ohm
(D) 402.5ohm

Answer: (D) 402.5ohm · Key from source paper

Q281 JEE Main 2019 · 11 Jan · Shift 1 MCQ

The resistance of the meter bridge AB in given figure is 4Ω. With a cell of emf ε = 0.5 V and rheostat resistance R_h = 2Ω the null point is obtained at some point J. When the cell is replaced by another

one of emf $\varepsilon = \varepsilon_2$ the same null point J is found for R_h = 6Ω. The emf ε_2 is:
(see the figure above)

Q30. The resistance of the meter bridge AB in given figure is 4Ω. With a cell of emf $\varepsilon = 0.5$ V and rheostat resistance $R_h = 2\Omega$ the null point is obtained at some point J. When the cell is replaced by another one of emf $\varepsilon = \varepsilon_2$ the same null point J is found for $R_h = 6\Omega$. The emf ε_2 is:

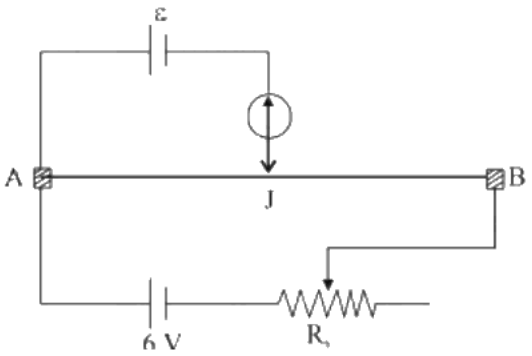

(1) 0.4 V
(2) 0.3 V
(3) 0.6 V
(4) 0.5 V

(A) 0.4 V
(B) 0.3 V
(C) 0.6 V
(D) 0.5 V

Answer: (B) 0.3 V · Key from source paper

Q282 JEE Main 2019 · 11 Jan · Shift 2 MCQ

In the circuit shown, the potential difference between A and B is
(see the figure above)

Q17.

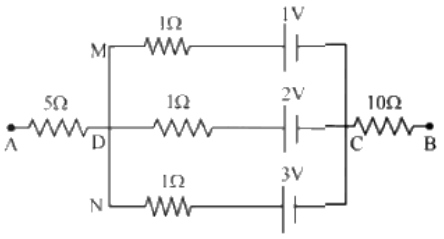

In the circuit shown, the potential difference between A and B is
(1) 1 V
(2) 2 V
(3) $3V$
(4) 6 V

(A) 1 V
(B) 2 V
(C) $3V$
(D) 6 V

Answer: (B) 2 V · Key from source paper

Q283 JEE Main 2019 · 11 Jan · Shift 2 MCQ

A galvanometer having a resistance of 20Ω and 30 division on both sides has figure of merit 0.005 ampere/ division. The resistance that should be connected in series such that it can be used as a voltmeter upto 15 volt, is:

(A) 100Ω
(B) 120Ω
(C) 80Ω
(D) 125Ω

Answer: (C) 80Ω · Key from source paper

Q284 JEE Main 2019 · 11 Jan · Shift 2 MCQ

In the experimental set up of metre bridge shown in the figure, the null point is obtaine data distance of 40 cm from A. If a 10Ω resistor is connected in series with R_1, the null point shifts by 10 cm. The resistance that should be connected in parallel with $(R_1 + 10)\Omega$ such that the null point shifts back to its initial position is

(see the figure above)

Q30. In the experimental set up of metre bridge shown in the figure, the null point is obtaine data distance of 40 cm from A. If a 10Ω resistor is connected in series with R_1, the null point shifts by 10 cm. The resistance that should be connected in parallel with $(R_1 + 10)\Omega$ such that the null point shifts back to its initial position is

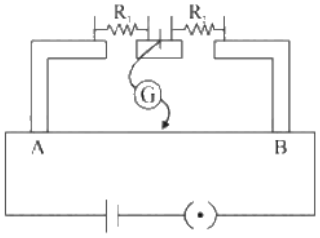

(1) 20Ω (2) 40Ω
(3) 60Ω (4) 30Ω

(A) 20Ω
(B) 40Ω
(C) 60Ω
(D) 30Ω

Answer: (C) 60Ω · Key from source paper

Q285 JEE Main 2019 · 10 Jan · Shift 1 MCQ

In the given circuit the cells have zero internal resistance. The currents (in amperes) passing through resistance R_1 and R_2 respectively, are:

(see the figure above)

Q17. In the given circuit the cells have zero internal resistance. The currents (in amperes) passing through resistance R_1 and R_2 respectively, are:

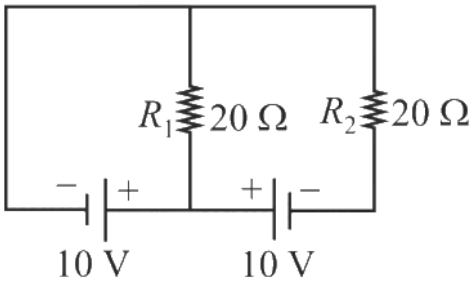

(1) 0, 1
(2) 2, 2
(3) 0.5 , 0
(4) 1, 2

(A) 0, 1
(B) 2, 2
(C) 0.5 , 0
(D) 1, 2

Answer: (C) 0.5 , 0 · Key from source paper

Q286 JEE Main 2019 · 10 Jan · Shift 1 MCQ

A uniform metallic wire has a resistance of $18\ \Omega$ and is bent into an equilateral triangle. Then, the resistance between any two vertices of the triangle is:

(A) $2\ \Omega$
(B) $12\ \Omega$
(C) $8\ \Omega$
(D) $4\ \Omega$

Answer: (D) $4\ \Omega$ · Key from source paper

Q287 JEE Main 2019 · 10 Jan · Shift 1 MCQ

A 2 W carbon resistor is color coded with green, black, red and silver respectively. The maximum current which can be passed through this resistor is:

(A) 100 mA
(B) 0.4 mA
(C) 20 mA
(D) 63 mA

Answer: (C) 20 mA · Key from source paper

Q288 JEE Main 2019 · 10 Jan · Shift 1 MCQ

A potentiometer wire AB having length L and resistance $12r$ is joined to a cell D of emf ε and internal resistance r. A cell C having EMF $\varepsilon/2$ and internal resistance $3r$ is connected. The length AJ, at which

the galvanometer, as shown in the figure, shows no deflection is

(see the figure above)

Q30. A potentiometer wire AB having length L and resistance $12r$ is joined to a cell D of emf ε and internal resistance r. A cell C having EMF $\varepsilon/2$ and internal resistance $3r$ is connected. The length AJ, at which the galvanometer, as shown in the figure, shows no deflection is

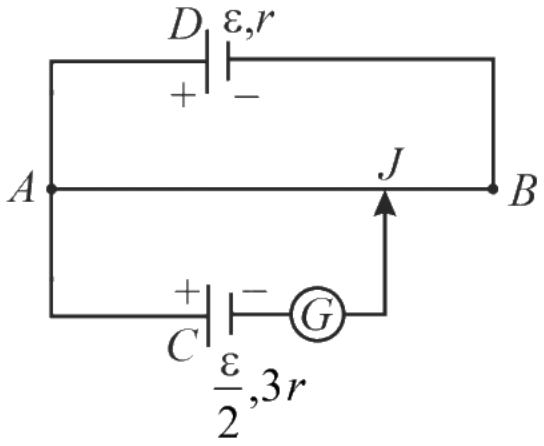

(1) $\frac{5}{12}L$
(2) $\frac{11}{24}L$
(3) $\frac{11}{12}L$
(4) $\frac{13}{24}L$

(A) $\frac{5}{12}L$
(B) $\frac{11}{24}L$
(C) $\frac{11}{12}L$
(D) $\frac{13}{24}L$

Answer: (D) $\frac{13}{24}L$ · Key from source paper

Q289 JEE Main 2019 · 10 Jan · Shift 2 MCQ

The actual value of resistance R, shown in the figure is 30Ω. This is measured in an experiment as shown using the standard formula $R = \frac{V}{I}$, where V and I are the readings of the voltmeter and ammeter, respectively. If the measured value of R is 5% less, then the internal resistance of the voltmeter is:

(see the figure above)

Q19. The actual value of resistance R, shown in the figure is 30Ω. This is measured in an experiment as shown using the standard formula $R = \frac{V}{I}$, where V and I are the readings of the voltmeter and ammeter, respectively. If the measured value of R is 5% less, then the internal resistance of the voltmeter is:

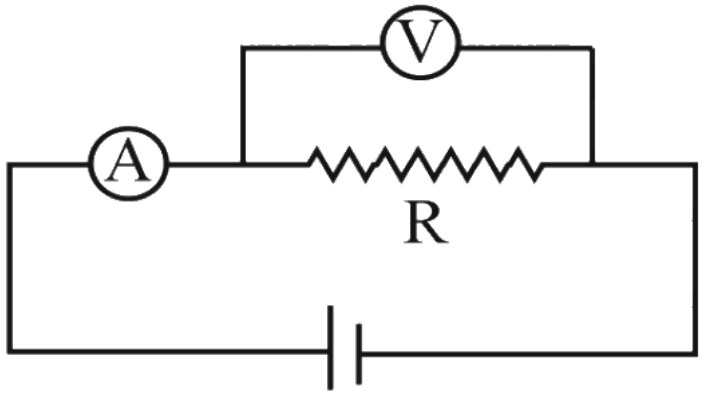

(1) 35Ω
(2) 600Ω
(3) 570Ω
(4) 350Ω

(A) 35Ω
(B) 600Ω
(C) 570Ω
(D) 350Ω

Answer: (C) 570Ω · Key from source paper

Q290 JEE Main 2019 · 10 Jan · Shift 2 MCQ

The Wheatstone bridge shown in the figure below, gets balanced when the carbon resistor used as R_1 has the colour code (orange, red, brown). The resistors R_2 and R_4 are $80\ \Omega$ and $40\ \Omega$, respectively. Assuming that the colour code for the carbon resistors gives their accurate values, the colour code for the carbon resistor, used as R_3, would be

(see the figure above)

Q20. The Wheatstone bridge shown in the figure below, gets balanced when the carbon resistor used as R_1 has the colour code (orange, red, brown). The resistors R_2 and R_4 are 80 Ω and 40 Ω, respectively. Assuming that the colour code for the carbon resistors gives their accurate values, the colour code for the carbon resistor, used as R_3, would be

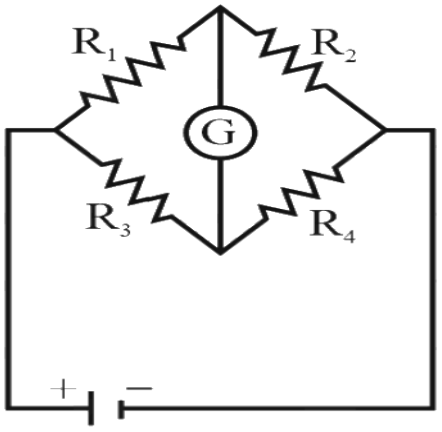

(1) brown, blue, black.
(2) brown, blue, brown.
(3) grey, black, brown.
(4) red, green, brown.

(A) brown, blue, black.
(B) brown, blue, brown.
(C) grey, black, brown.
(D) red, green, brown.

Answer: (B) brown, blue, brown. · Key from source paper

Q291 JEE Main 2019 · 10 Jan · Shift 2 MCQ

A current of $2\ \mathrm{mA}$ was passed through an unknown resistor which dissipated a power of $4.4\ \mathrm{W}$. Dissipated power when an ideal power supply of $11\ \mathrm{V}$ is connected across it is:

(A) $11 \times 10^{5}\ \mathrm{W}$
(B) $11 \times 10^{-3}\ \mathrm{W}$
(C) $11 \times 10^{-5}\ \mathrm{W}$
(D) $11 \times 10^{-4}\ \mathrm{W}$

Answer: (C) $11 \times 10^{-5}\ \mathrm{W}$ · Key from source paper

Q292 JEE Main 2019 · 9 Jan · Shift 1 MCQ

A copper wire is stretched to make it 0.5% longer. The percentage change in its electrical resistance if its volume remains unchanged is:

(A) 2.5%
(B) 1.0%
(C) 2.0%
(D) 0.5%

Answer: (B) 1.0% · Key from source paper

Q293 JEE Main 2019 · 9 Jan · Shift 1 MCQ

When the switch S, in the circuit shown, is closed, then the value of current i will be:
(see the figure above)

Q17. When the switch S, in the circuit shown, is closed, then the value of current i will be:

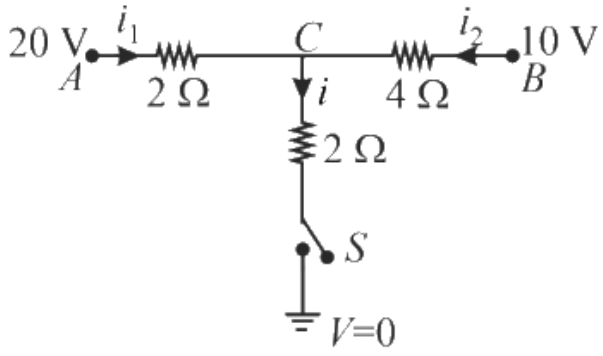

(1) 2 A
(2) 5 A
(3) 3 A
(4) 4 A

(A) $2\ A$
(B) $5\ A$
(C) $3\ A$
(D) $4\ A$

Answer: (B) $5\ A$ · Key from source paper

Q294 JEE Main 2019 · 9 Jan · Shift 1 MCQ

Drift speed of electrons, when $1.5\ A$ current flows in a copper wire of cross section $5\ \text{mm}^2$ is v_d . If the electron density in copper is $9 \times 10^{28}\ \text{m}^{-3}$ the value of v_d in $\text{mm}\ \text{s}^{-1}$ is close to (Take charge of an electron to be $= 1.6 \times 10^{-19}$ C)

(A) 0.2
(B) 3
(C) 2
(D) 0.02

Answer: (D) 0.02 · Key from source paper

Q295 JEE Main 2019 · 9 Jan · Shift 1 MCQ

A resistance is shown in the figure. Its value and tolerance are given respectively by:
(see the figure above)

Q20. A resistance is shown in the figure. Its value and tolerance are given respectively by:

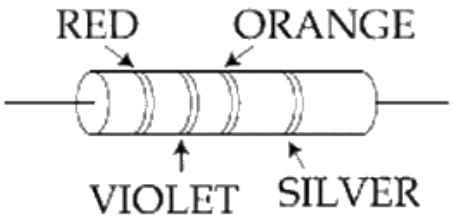

(1) $27\ k\Omega,\ 10\%$
(2) $270\ \Omega,\ 5\%$
(3) $270\ \Omega,\ 10\%$
(4) $27\ k\Omega,\ 20\%$

(A) $27\ k\Omega,\ 10\%$
(B) $270\ \Omega,\ 5\%$
(C) $270\ \Omega,\ 10\%$
(D) $27\ k\Omega,\ 20\%$

Answer: (A) $27\ k\Omega,\ 10\%$ · Key from source paper

Q296 JEE Main 2019 · 9 Jan · Shift 2 MCQ

A carbon resistance has a following colour code. What is the value of the resistance?
(see the figure above)

Q17. A carbon resistance has a following colour code. What is the value of the resistance?



(1) $6.4\ M\Omega \pm 5\%$
(2) $64\ k\Omega \pm 10\%$
(3) $530\ k\Omega \pm 5\%$
(4) $5.3\ M\Omega \pm 5\%$

(A) $6.4\ M\Omega \pm 5\%$
(B) $64\ k\Omega \pm 10\%$
(C) $530\ k\Omega \pm 5\%$
(D) $5.3\ M\Omega \pm 5\%$

Answer: (C) $530\ k\Omega \pm 5\%$ · Key from source paper

Q297 JEE Main 2019 · 9 Jan · Shift 2 MCQ

In the given circuit the internal resistance of the $18V$ cell is negligible. If $R_1 = 400\ \Omega$, $R_3 = 100\ \Omega$ and $R_4 = 500\ \Omega$ and the reading of an ideal voltmeter across R_4 is $5\ V$, then the value of R_2 will be:
(see the figure above)

Q18. In the given circuit the internal resistance of the $18V$ cell is negligible. If $R_1 = 400\ \Omega$, $R_3 = 100\ \Omega$ and $R_4 = 500\ \Omega$ and the reading of an ideal voltmeter across R_4 is $5\ V$, then the value of R_2 will be:

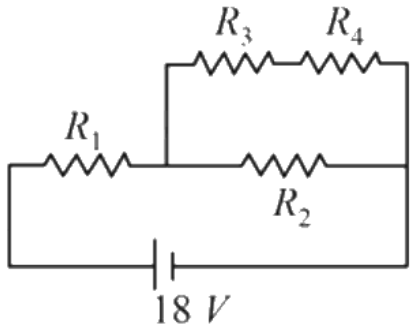

(1) $550\ \Omega$
(2) $300\ \Omega$
(3) $450\ \Omega$
(4) $230\ \Omega$

(A) $550\ \Omega$
(B) $300\ \Omega$
(C) $450\ \Omega$
(D) $230\ \Omega$

Answer: (B) $300\ \Omega$ · Key from source paper

Q298 JEE Main 2018 · 16 Apr · Online MCQ

A heating element has a resistance of $100\ \Omega$ at room temperature. When it is connected to a supply of 220 V, a steady current of 2 A passes in it and temperature is $500\ ^oC$ more than the room temperature. The temperature coefficient of resistance of the heating element is

(A) $5 \times 10^{-4}\ ^oC^{-1}$
(B) $2 \times 10^{-4}\ ^oC^{-1}$
(C) $1 \times 10^{-4}\ ^oC^{-1}$
(D) $0.5 \times 10^{-4}\ ^oC^{-1}$

Answer: (B) $2 \times 10^{-4}\ ^oC^{-1}$ · Key from source paper

Q299 JEE Main 2018 · 16 Apr · Online MCQ

A galvanometer with its coil resistance $25\ \Omega$ requires a current of 1 mA for its full deflection. In order to construct an ammeter to read up to a current of 2 A the approximate value of the shunt resistance should be:

(A) $1.25 \times 10^{-2}\ \Omega$
(B) $2.5 \times 10^{-3}\ \Omega$
(C) $2.5 \times 10^{-2}\ \Omega$
(D) $1.25 \times 10^{-3}\ \Omega$

Answer: (A) $1.25 \times 10^{-2}\ \Omega$ · Key from source paper

Q300 JEE Main 2018 · 15 Apr · Shift 1 MCQ

In the given circuit all resistances are of value R ohm each. The equivalent resistance between A and B is:
(see the figure above)

Q16. In the given circuit all resistances are of value R ohm each. The equivalent resistance between A and B is:

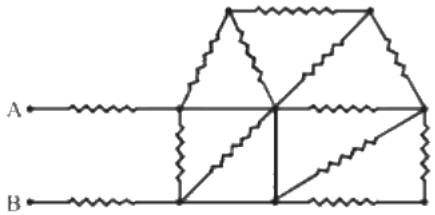

(1) $2R$ (2) $\frac{5R}{2}$
(3) $\frac{5R}{3}$ (4) $3R$

(A) $2R$
(B) $\frac{5R}{2}$
(C) $\frac{5R}{3}$
(D) $3R$

Answer: (A) $2R$ · Key from source paper

Q301 JEE Main 2018 · 15 Apr · Shift 1 MCQ

In a meter bridge, as shown in the figure, it is given that resistance $Y = 12.5\Omega$ and that the balance is obtained at a distance $39.5\ \text{cm}$ from end A (by jockey J). After interchanging the resistances X and Y, a new balance point is found at a distance l_2 from end A. What are the values of X and l_2 ?
(see the figure above)

Q17. In a meter bridge, as shown in the figure, it is given that resistance $Y = 12.5\Omega$ and that the balance is obtained at a distance 39.5 cm from end A (by jockey J). After interchanging the resistances X and Y, a new balance point is found at a distance l_2 from end A. What are the values of X and l_2 ?

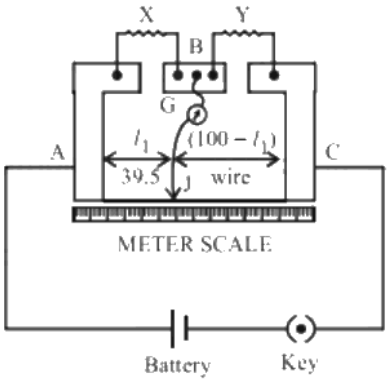

(1) 19.15Ω and 39.5 cm
(2) 8.16Ω and 60.5 cm
(3) 19.15Ω and 60.5 cm
(4) 8.16Ω and 39.5 cm

(A) 19.15Ω and 39.5 cm
(B) 8.16Ω and 60.5 cm
(C) 19.15Ω and 60.5 cm
(D) 8.16Ω and 39.5 cm

Answer: (B) 8.16Ω and 60.5 cm · Key from source paper

Q302 JEE Main 2018 · 15 Apr · Shift 2 MCQ

A copper rod of cross-sectional area A carries a uniform current I through it. At temperature T, if the volume charge density of the rod is ρ, how long will the charges take to travel a distance d ?

(A) $\frac{2\rho dA}{IT}$
(B) $\frac{2\rho dA}{I}$
(C) $\frac{\rho dA}{I}$
(D) $\frac{\rho dA}{IT}$

Answer: (C) $\frac{\rho dA}{I}$ · Key from source paper

Q303 JEE Main 2018 · 15 Apr · Shift 2 MCQ

A constant voltage is applied between two ends of a metallic wire. If the length is halved and the radius of the wire is doubled, the rate of heat developed in the wire will be:

(A) Increased 8 times
(B) Doubled
(C) Halved
(D) Unchanged

Answer: (A) Increased 8 times · Key from source paper

Q304 JEE Main 2018 · 8 Apr · Offline MCQ

Two batteries with e.m.f. $12\ \mathrm{V}$ and $13\ \mathrm{V}$ are connected in parallel across a load resistor of $10\ \Omega$. The internal resistance of the two batteries are $1\ \Omega$ and $2\ \Omega$ respectively. The voltage across the load lies between,

(A) $11.7\ \mathrm{V}$ and $11.8\ \mathrm{V}$
(B) $11.6\ \mathrm{V}$ and $11.7\ \mathrm{V}$
(C) $11.5\ \mathrm{V}$ and $11.6\ \mathrm{V}$
(D) $11.4\ \mathrm{V}$ and $11.5\ \mathrm{V}$

Answer: (C) $11.5\ \mathrm{V}$ **and** $11.6\ \mathrm{V}$ · Key from source paper

---

Q305 JEE Main 2018 · 8 Apr · Offline MCQ

On interchanging the resistances, the balance point of a meter bridge shifts to the left by $10\ \mathrm{cm}$. The resistance of their series combination is $1\ \mathrm{k}\Omega$. How much was the resistance on the left slot before interchanging the resistances?

(A) $910\ \Omega$
(B) $990\ \Omega$
(C) $505\ \Omega$
(D) $550\ \Omega$

Answer: (D) $550\ \Omega$ · Key from source paper

Q306 JEE Main 2018 · 8 Apr · Offline MCQ

In a potentiometer experiment, it is found that no current passes through the galvanometer when the terminals of the cell are connected across $52\ \mathrm{cm}$ of the potentiometer wire. If the cell is shunted by a resistance of $5\ \Omega$,a balance is found when the cell is connected across $40\ \mathrm{cm}$ of the wire. Find the internal resistance of the cell.

(A) $2.5\ \Omega$
(B) $1\ \Omega$
(C) $1.5\ \Omega$
(D) $2\ \Omega$

Answer: (C) $1.5\ \Omega$ · Key from source paper

Q307 JEE Main 2017 · 9 Apr · Online MCQ

In a meter bridge experiment resistances are connected as shown in the figure. Initially resistance $P = 4\ \Omega$ and the neutral point N is at 60 cm from A. Now an unknown resistance R is connected in series to P and the new position of the neutral point is at 80 cm from A. The value of unknown resistance R is -

(see the figure above)

Q18. In a meter bridge experiment resistances are connected as shown in the figure. Initially resistance $P = 4\ \Omega$ and the neutral point N is at 60 cm from A. Now an unknown resistance R is connected in series to P and the new position of the neutral point is at 80 cm from A. The value of unknown resistance R is -

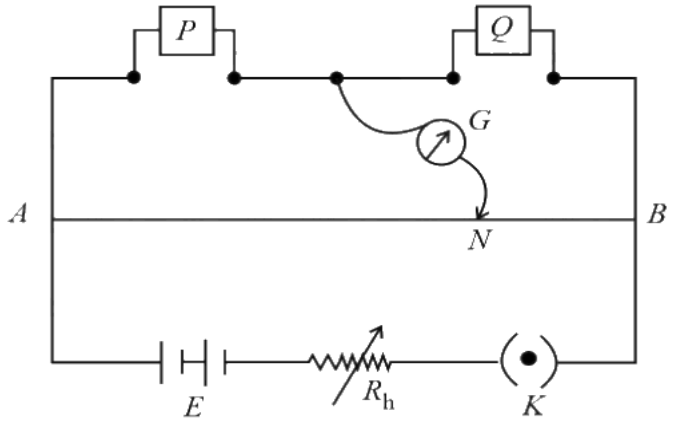

(1) $\frac{33}{5}\ \Omega$
(2) $6\ \Omega$
(3) $\frac{20}{3}\ \Omega$
(4) $7\ \Omega$

(A) $\frac{33}{5}\ \Omega$
(B) $6\ \Omega$
(C) $\frac{20}{3}\ \Omega$
(D) $7\ \Omega$

Answer: (C) $\frac{20}{3}\ \Omega$ · Key from source paper

Q308 JEE Main 2017 · 9 Apr · Online MCQ

A uniform wire of length l and radius r has a resistance of $100\ \Omega$. It is recast into a wire of radius $\frac{r}{2}$. The resistance of new wire will be-

(A) $1600\ \Omega$
(B) $100\ \Omega$
(C) $200\ \Omega$
(D) $400\ \Omega$

Answer: (A) $1600\ \Omega$ · Key from source paper

Q309 JEE Main 2017 · 9 Apr · Online MCQ

The figure shows three circuits I, II and III which are connected to a 3 V battery. If the powers dissipated by the configurations I, II and III are P_1, P_2 and P_3 respectively, then -
(see the figure above)

Q20. The figure shows three circuits I, II and III which are connected to a 3 V battery. If the powers dissipated by the configurations I, II and III are P_1, P_2 and P_3 respectively, then -

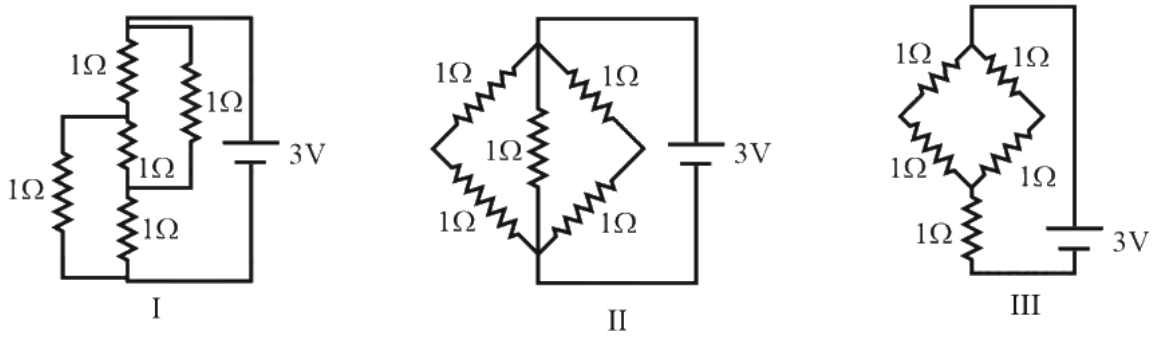

(1) $P_2 > P_1 > P_3$
(2) $P_1 > P_2 > P_3$
(3) $P_3 > P_2 > P_1$
(4) $P_1 > P_3 > P_2$

(A) $P_2 > P_1 > P_3$
(B) $P_1 > P_2 > P_3$
(C) $P_3 > P_2 > P_1$
(D) $P_1 > P_3 > P_2$

Answer: (A) $P_2 > P_1 > P_3$ · Key from source paper

Q310 JEE Main 2017 · 8 Apr · Online MCQ

A 9 V battery with an internal resistance of 0.5 Ω is connected across an infinite network, as shown in the figure. All ammeters A_1, A_2, A_3 and voltmeter V are ideal.
Choose the correct statement.
(see the figure above)

Q17.

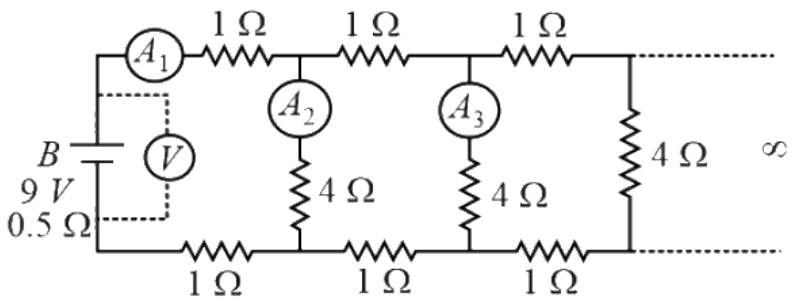

A 9 V battery with an internal resistance of 0.5 Ω is connected across an infinite network, as shown in the figure. All ammeters A_1, A_2, A_3 and voltmeter V are ideal.
Choose the correct statement.

(1) Reading of A_1 is 18 A.
(2) Reading of V is 9 V.
(3) Reading of V is 7 V.
(4) Reading of A_1 is 2 A.

(A) Reading of A_1 is 18 A.

(B) Reading of V is 9 V.

(C) Reading of V is 7 V.

(D) Reading of A_1 is 2 A.

Answer: (D) Reading of A_1 is 2 A. · Key from source paper

Q311 JEE Main 2017 · 8 Apr · Online MCQ

A potentiometer PQ is set up to compare two resistances, as shown in the figure. The ammeter A in the circuit reads 1.0 A when the two-way key K_3 is open. The balance point is at a length l_1 cm from P when the two-way key K_3 is plugged in between 2 and 1, while the balance point is at a length l_2 cm from P when the key K_3 is plugged in between 3 and 1. The ratio of two resistances $\frac{R_1}{R_2}$, is found to be

(see the figure above)

Q18. A potentiometer PQ is set up to compare two resistances, as shown in the figure. The ammeter A in the circuit reads 1.0 A when the two-way key K_3 is open. The balance point is at a length l_1 cm from P when the two-way key K_3 is plugged in between 2 and 1, while the balance point is at a length l_2 cm from P when the key K_3 is plugged in between 3 and 1. The ratio of two resistances $\frac{R_1}{R_2}$, is found to be

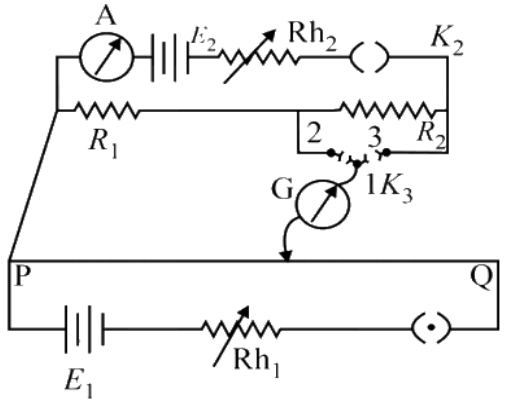

(1) $\frac{l_1}{l_1-l_2}$

(2) $\frac{l_2}{l_2-l_1}$

(3) $\frac{l_1}{l_1+l_2}$

(4) $\frac{l_1}{l_2-l_1}$

(A) $\frac{l_1}{l_1-l_2}$

(B) $\frac{l_2}{l_2-l_1}$

(C) $\frac{l_1}{l_1+l_2}$

(D) $\frac{l_1}{l_2-l_1}$

Answer: (D) $\frac{l_1}{l_2-l_1}$ · Key from source paper

Q312 JEE Main 2017 · 2 Apr · Offline MCQ

see figure

Q18.

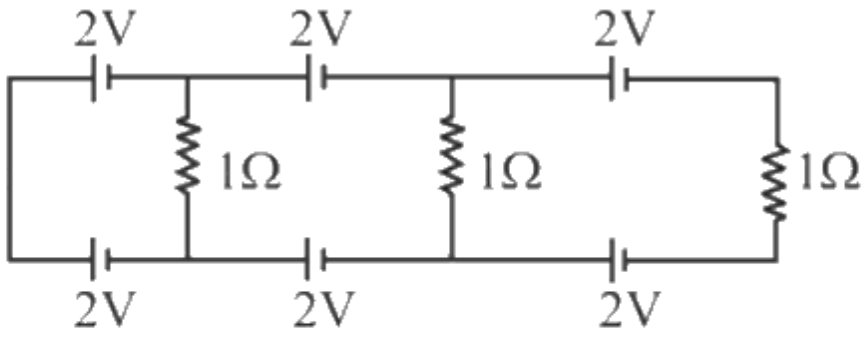

In the above circuit the current in each resistance is:

(1) 0 A (2) 1 A

(3) 0.25 A (4) 0.5 A

(A) 0 A
(B) 1 A
(C) 0.25 A
(D) 0.5 A

Answer: (A) 0 A · Key from source paper

Q313 JEE Main 2017 · 2 Apr · Offline MCQ

Which of the following statements is false?

(A) Kirchhoff's second law represents energy conservation
(B) Wheatstone bridge is the most sensitive when all the four resistances are of the same order of magnitude
(C) In a balanced Wheatstone bridge if the cell and the galvanometer are exchanged, the null point is disturbed
(D) A rheostat can be used as a potential divider

Answer: (C) In a balanced Wheatstone bridge if the cell and the galvanometer are exchanged, the null point is disturbed · Key from source paper

Q314 JEE Main 2017 · 2 Apr · Offline MCQ

When a current of 5 mA is passed through a galvanometer having a coil of resistance 15 Ω, it shows full-scale deflection. The value of the resistance to be put in series with the galvanometer to convert it into a voltmeter of range 0 - 10 V is:

(A) $4.005 \times 10^3\ \Omega$
(B) $1.985 \times 10^3\ \Omega$
(C) $2.045 \times 10^3\ \Omega$
(D) $2.535 \times 10^3\ \Omega$

Answer: (B) $1.985 \times 10^3\ \Omega$ · Key from source paper

Q315 JEE Main 2016 · 10 Apr · Online MCQ

The resistance of an electrical toaster has a temperature dependence given by $R(T) = R_0\,[1 + \alpha(T - T_0)]$ in its range of operation. At $T_0 = 300\ \text{K}$, $R = 100\ \Omega$ and at $T = 500\ \text{K}$, $R = 120\ \Omega$. The toaster is connected to a voltage source at $200\ \text{V}$ and its temperature is raised at a constant rate from 300 to $500\ \text{K}$ in $30\ \text{s}$. The total work done in raising the temperature is :

(A) $60000\ \ln\left(\frac{6}{5}\right)\ \text{J}$
(B) $200\ \ln\frac{2}{3}\ \text{J}$
(C) $300\ \text{J}$
(D) $400\ \ln\left(\frac{1.5}{1.3}\right)\ \text{J}$

Answer: (A) $60000\ \ln\left(\frac{6}{5}\right)\ \text{J}$ · Key from source paper

Q316 JEE Main 2016 · 9 Apr · Online MCQ

see figure

Q16.

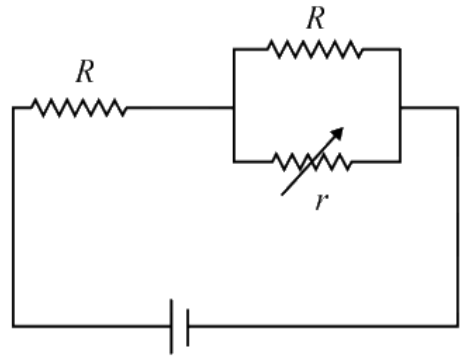

In the circuit shown, the resistance r is a variable resistance. If for $\text{r} = \text{fR}$, the heat generation in r is maximum then the value of f is

(1) $\frac{1}{2}$ (2) 1
(3) $\frac{1}{4}$ (4) $\frac{3}{4}$

(A) $\frac{1}{2}$
(B) 1
(C) $\frac{1}{4}$
(D) $\frac{3}{4}$

Answer: (A) $\frac{1}{2}$ · Key from source paper

Q317 JEE Main 2016 · 9 Apr · Online MCQ

A $50\ \Omega$ resistance is connected to a battery of $5\ V$. A galvanometer of resistance $100\ \Omega$ is to be used as an ammeter to measure current through the resistance, for this a resistance r_S is connected to the galvanometer. Which of the following connections should be employed if the measured current is with in 1% of the current without the ammeter in the circuit?

(A) $r_S = 0.5\Omega$ in series with galvanometer
(B) $r_S = 1\ \Omega$ in series with galvanometer
(C) $r_S = 1\ \Omega$ in parallel with galvanometer
(D) $r_S = 0.5\ \Omega$ in parallel with the galvanometer

Answer: (D) $r_S = 0.5\ \Omega$ in parallel with the galvanometer · Key from source paper

Q318 JEE Main 2016 · 3 Apr · Offline MCQ

A galvanometer having a coil resistance of 100 Ω gives a full scale deflection, when a current of 1 mA is passed through it. The value of the resistance, which can convert this galvanometer into ammeter giving a full scale deflection for a current of 10 A, is:

(A) $0.1\ \Omega$
(B) $3\ \Omega$
(C) $0.01\ \Omega$
(D) $2\ \Omega$

Answer: (C) $0.01\ \Omega$ · Key from source paper

Q319 JEE Main 2015 · 11 Apr · Online MCQ

In the electric network shown, when no current flows through the 4 Ω resistor in the arm EB, the potential difference between the points A and D will be:
(see the figure above)

Q18. In the electric network shown, when no current flows through the 4 Ω resistor in the arm EB, the potential difference between the points A and D will be:

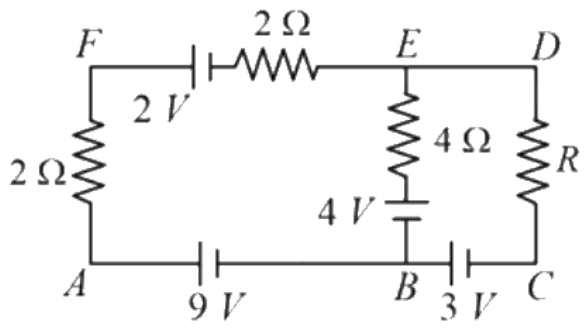

(1) 5 V
(2) 3 V
(3) 4 V
(4) 6 V

(A) 5 V
(B) 3 V
(C) 4 V
(D) 6 V

Answer: (A) 5 V · Key from source paper

Q320 JEE Main 2015 · 10 Apr · Online MCQ

A 10 V battery with internal resistance 1 Ω and a 15 V battery with internal resistance 0.6 Ω are connected in parallel to a voltmeter (see figure). The reading in the voltmeter will be close to:
(see the figure above)

Q18. A 10 V battery with internal resistance 1 Ω and a 15 V battery with internal resistance 0.6 Ω are connected in parallel to a voltmeter (see figure). The reading in the voltmeter will be close to:

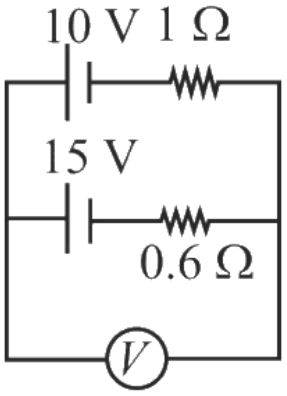

(1) 11.9 V
(2) 13.1 V
(3) 12.5 V
(4) 24.5 V

(A) 11.9 V
(B) 13.1 V
(C) 12.5 V
(D) 24.5 V

Answer: (B) 13.1 V · Key from source paper

Q321 JEE Main 2015 · 10 Apr · Online MCQ

Suppose the drift velocity v_d in a material varied with the applied electric field E as $v_d \propto \sqrt{E}$. Then $V - I$ graph for a wire made of such a material is best given by:

Q19. Suppose the drift velocity v_d in a material varied with the applied electric field E as $v_d \propto \sqrt{E}$. Then $V - I$ graph for a wire made of such a material is best given by:

(1) 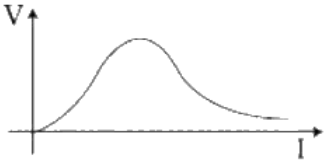

(2) 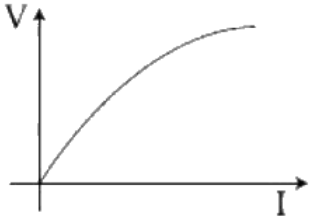

(3) 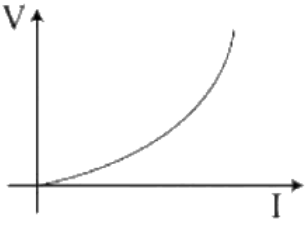

(4) 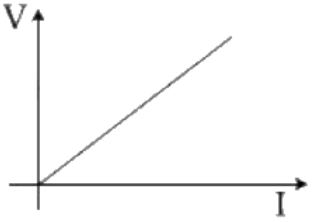

(A) *see figure*
(B) *see figure*
(C) *see figure*
(D) *see figure*

Answer: (C) · Key from source paper

Q322 JEE Main 2015 · 4 Apr · Offline MCQ

see figure

Q18. 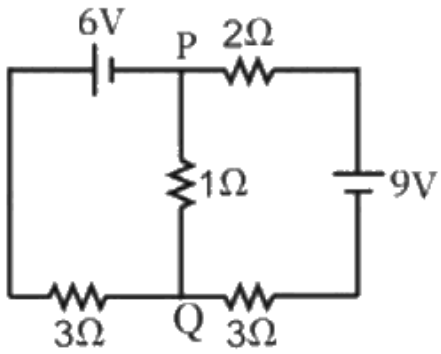

In the circuit shown, the current in the 1 Ω resistor is:

(1) 0.13 A, from P to Q
(2) 1.3 A, from P to Q
(3) 1.3 A, from Q to P
(4) 0.13 A, from Q to P

(A) 0.13 A, from P to Q
(B) 1.3 A, from P to Q
(C) 1.3 A, from Q to P
(D) 0.13 A, from Q to P

Answer: (D) 0.13 A, from Q to P · Key from source paper

Q323 JEE Main 2015 · 4 Apr · Offline MCQ

When $5\ \mathrm{V}$ potential difference is applied across a wire of length $0.1\ \mathrm{m}$, the drift speed of electrons is $2.5 \times 10^{-4}\ \mathrm{m\,s^{-1}}$. If the electron density in the wire is $8 \times 10^{28}\ \mathrm{m^{-3}}$, the resistivity of the material is close to:

(A) $1.56 \times 10^{-5}\ \Omega\,\mathrm{m}$
(B) $1.6 \times 10^{-8}\ \Omega\,\mathrm{m}$
(C) $1.6 \times 10^{-7}\ \Omega\,\mathrm{m}$
(D) $1.6 \times 10^{-6}\ \Omega\,\mathrm{m}$

Answer: (A) $1.56 \times 10^{-5}\ \Omega\,\mathrm{m}$ · Key from source paper

Q324 JEE Main 2014 · 19 Apr · Online MCQ

see figure

Q18.

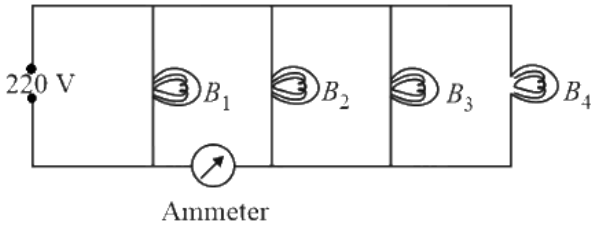

Four bulbs B_1, B_2, B_3 and B_4 of 100 W each are connected to 220 V main as shown in the figure. The reading in an ideal ammeter will be

(1) 0.90 A
(2) 1.35 A
(3) 0.45 A
(4) 1.80 A

(A) 0.90 A
(B) 1.35 A
(C) 0.45 A
(D) 1.80 A

Answer: (B) 1.35 A · Key from source paper

Q325 JEE Main 2014 · 11 Apr · Online MCQ

In the circuit shown, current (in A) through 50 V and 30 V batteries are, respectively:
(see the figure above)

Q18. In the circuit shown, current (in A) through 50 V and 30 V batteries are, respectively:

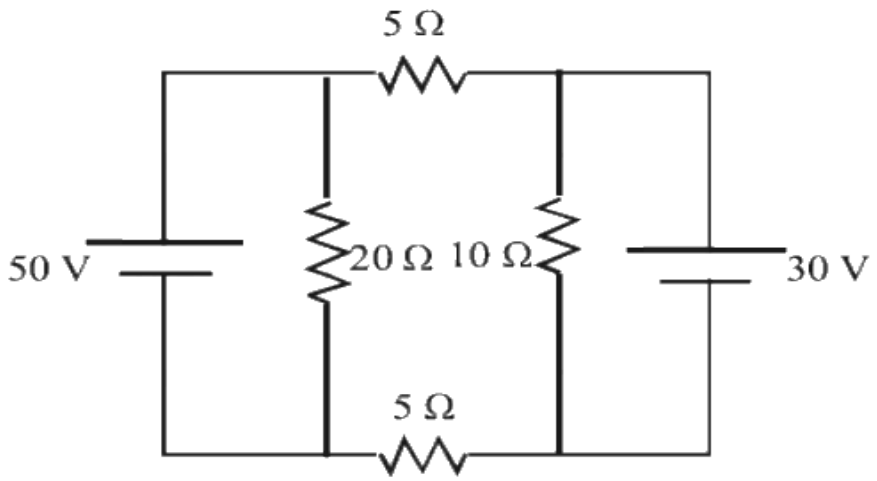

(1) 2.5 and 3
(2) 3.5 and 2
(3) 4.5 and 1
(4) 3 and 2.5

(A) 2.5 and 3
(B) 3.5 and 2
(C) 4.5 and 1
(D) 3 and 2.5

Answer: (C) 4.5 and 1 · Checked by our team

Q326 JEE Main 2014 · 9 Apr · Online MCQ

A d.c. main supply of e.m.f. 220 V is connected across a storage battery of e.m.f. 200 V through a resistance of 1 Ω. The battery terminals are connected to external resistance R. The minimum value of R, so that a current passes through the battery to charge it is:

(A) 9 Ω
(B) 7 Ω
(C) 11 Ω
(D) 0

Answer: (C) 11 Ω · Key from source paper

Q327 JEE Main 2014 · 6 Apr · Offline MCQ

In a large building, there are 15 bulbs of 40 W, 5 bulbs of 100 W, 5 fans of 80 W and 1 heater of 1 kW. The voltage of the electric mains is 220 V. The minimum capacity of the main fuse of the building will be:

(A) 8 A
(B) 10 A
(C) 12 A
(D) 14 A

Answer: (C) 12 A · Key from source paper

Q328 JEE Main 2013 · 25 Apr · Online MCQ

Six equal resistances are connected between points P, Q and R as shown in figure. Then net resistance will be maximum between :
(see the figure above)

Q16. Six equal resistances are connected between points P, Q and R as shown in figure. Then net resistance will be

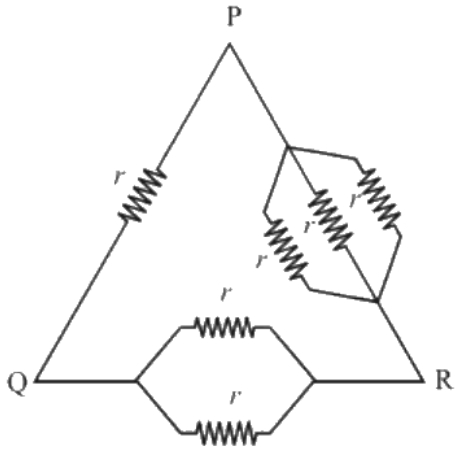

maximum between :
(1) P and R
(2) P and Q
(3) Q and R
(4) Any two points

(A) P and R
(B) P and Q
(C) Q and R
(D) Any two points

Answer: (B) P and Q · Key from source paper

Q329 JEE Main 2013 · 23 Apr · Online MCQ

Which of the four resistances P, Q, R and S generate the greatest amount of heat when a current flows from A to B ?
(see the figure above)

Q18. Which of the four resistances P, Q, R and S generate the greatest amount of heat when a current flows from A

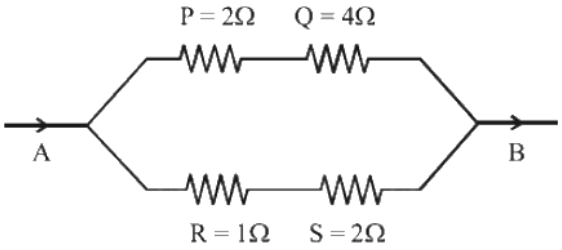

to B ?

(1) Q
(2) S
(3) P
(4) R

(A) Q
(B) S
(C) P
(D) R

Answer: (B) S · Key from source paper

Q330 JEE Main 2013 · 22 Apr · Online MCQ

A dc source of emf $\mathrm{E}_1 = 100$ V and internal resistance $r = 0.5\Omega$, a storage battery of emf $\mathrm{E}_2 = 90$ V and an external resistance R are connected as shown in figure. For what value of R no current will pass through the battery?

(see the figure above)

Q17. A dc source of emf $\mathrm{E}_1 = 100$ V and internal resistance $r = 0.5\Omega$, a storage battery of emf $\mathrm{E}_2 = 90$ V and an external resistance R are connected as shown in figure. For what value of R no current will pass through the

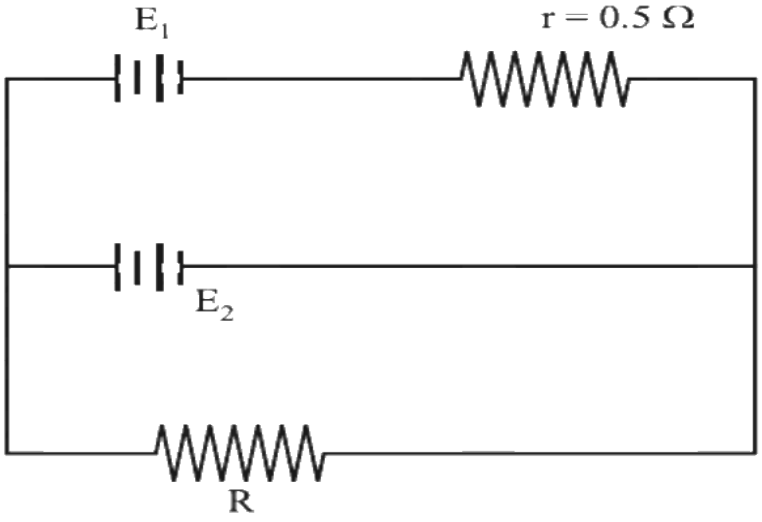

battery?

(1) 5.5Ω
(2) 3.5Ω
(3) 4.5Ω
(4) 2.5Ω

(A) 5.5Ω
(B) 3.5Ω
(C) 4.5Ω
(D) 2.5Ω

Answer: (C) 4.5Ω · Key from source paper

Q331 JEE Main 2013 · 9 Apr · Online MCQ

In a metre bridge experiment null point is obtained at 40 cm from one end of the wire when resistance X is balanced against another resistance Y. If X < Y, then the new position of the null point from the same end, if one decides to balance a resistance of 3X against Y, will be close to :

(A) 80 cm
(B) 75 cm
(C) 67 cm
(D) 50 cm

Answer: (C) 67 cm · Key from source paper

Q332 JEE Main 2013 · 9 Apr · Online MCQ

A letter 'A' is constructed of a uniform wire with resistance $1.0\,\Omega$ per cm, The sides of the letter are 20 cm and the cross piece in the middle is 10 cm long. The apex angle is 60 . The resistance between the ends of the legs is close to:

(A) $50.0\,\Omega$
(B) $10\,\Omega$
(C) $36.7\,\Omega$
(D) $26.7\,\Omega$

Answer: (D) $26.7\,\Omega$ · Key from source paper

Q333 JEE Main 2013 · 9 Apr · Online MCQ

A shunt of resistance $1\,\Omega$ is connected across a galvanometer of $120\,\Omega$ resistance. A current of 5.5 ampere gives full scale deflection in the galvanometer. The current that will give full scale deflection in the absence of the shunt is nearly :

(A) 5.5 ampere
(B) 0.5 ampere
(C) 0.004 ampere
(D) 0.045 ampere

Answer: (D) 0.045 ampere · Key from source paper

Q334 JEE Main 2013 · 7 Apr · Offline MCQ

The supply voltage to a room is 120 V. The resistance of the lead wires is 6 Ω. A 60 W bulb is already switched on. What is the decrease of voltage across the bulb, when a 240 W heater is switched on in parallel to the bulb?

(A) 13.3 V
(B) 10.4 V
(C) zero V
(D) 2.9 V

Answer: (B) 10.4 V · Key from source paper

Q335 JEE Main 2013 · 7 Apr · Offline MCQ

This question has Statement I and Statement II. Of the four choices given after the Statements, choose the one that best describes the two Statements.
Statement - I : Higher the range, greater is the resistance of ammeter.
Statement - II : To increase the range of ammeter, additional shunt needs to be used across it.

(A) Statement-I is true, Statement-II is false.
(B) Statement-I is false, Statement-II is true.
(C) Statement-I is true, Statement-II is true, Statement-II is the correct explanation of Statement-I.
(D) Statement-I is true, Statement-II is true, Statement-II is not the correct explanation of Statement-I.

Answer: (B) Statement-I is false, Statement-II is true. · Key from source paper

Q336 AIEEE 2012 · 26 May · Online MCQ

The resistance of a wire is R. It is bent at the middle by 180° and both the ends are twisted together to make a shorter wire. The resistance of the new wire is

(A) $2R$
(B) $R/2$
(C) $R/4$
(D) $R/8$

Answer: (C) $R/4$ · Key from source paper

Q337 AIEEE 2012 · 26 May · Online MCQ

In an experiment of potentiometer for measuring the internal resistance of primary cell a balancing length ℓ is obtained on the potentiometer wire when the cell is open circuit. Now the cell is short circuited by a resistance R. If R is to be equal to the internal resistance of the cell the balancing length on the potentiometer wire will be

(A) ℓ
(B) 2ℓ
(C) $\ell/2$
(D) $\ell/4$

Answer: (C) $\ell/2$ · Key from source paper

Q338 AIEEE 2012 · 19 May · Online MCQ

A 6.0 volt battery is connected to two light bulbs as shown in figure. Light bulb 1 has resistance 3 ohm while light bulb 2 has resistance 6ohm. Battery has negligible internal resistance. Which bulb will glow brighter? *(see the figure above)*

Q17. A 6.0 volt battery is connected to two light bulbs as shown in figure. Light bulb 1 has resistance 3 ohm while light bulb 2 has resistance 6ohm. Battery has negligible internal resistance. Which bulb will glow brighter?

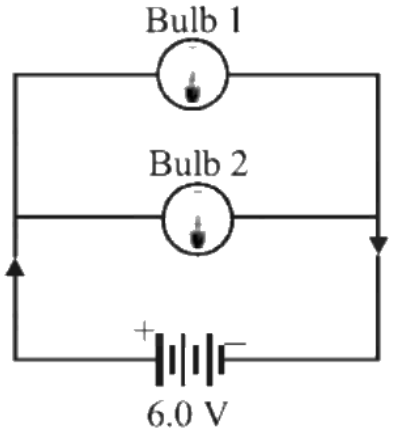

(1) Bulb 1 will glow more first and then its brightness will become less than bulb 2
(2) Bulb 1
(3) Bulb 2
(4) Both glow equally

(A) Bulb 1 will glow more first and then its brightness will become less than bulb 2
(B) Bulb 1
(C) Bulb 2
(D) Both glow equally

Answer: (B) Bulb 1 · Key from source paper

Q339 AIEEE 2012 · 19 May · Online MCQ

A generator has armature resistance of 0.1Ω and develops an induced emf of $120\ \mathrm{V}$ when driven at its rated speed. Its terminal voltage when a current of $50\ \mathrm{A}$ is being drawn is

(A) $120\ \text{V}$
(B) $5\ \text{V}$
(C) $115\ \text{V}$
(D) $70\ \text{V}$

Answer: (C) $115\ \text{V}$ · Key from source paper

Q340 AIEEE 2012 · 12 May · Online MCQ

Three resistors of $4\,\Omega$, $6\,\Omega$ and $12\,\Omega$ are connected in parallel and the combination is connected in series with a $1.5\ \text{V}$ battery of $1\,\Omega$ internal resistance. The rate of Joule heating in the $4\,\Omega$ resistor is

(A) $0.55\ \text{W}$
(B) $0.33\ \text{W}$
(C) $0.25\ \text{W}$
(D) $0.86\ \text{W}$

Answer: (C) $0.25\ \text{W}$ · Key from source paper

Q341 AIEEE 2012 · 12 May · Online MCQ

It is preferable to measure the e.m.f. of a cell by potentiometer than by a voltmeter because of the following possible reasons. (i) In case of potentiometer, no current flows through the cell. (ii) The length of the potentiometer allows greater precision. (iii) Measurement by the potentiometer is quicker. (iv) The sensitivity of the galvanometer, when using a potentiometer is not relevant. Which of these reasons are correct?

(A) (i),(iii),(iv)
(B) (i),(iii),(iv)
(C) (i),(ii)
(D) (i),(ii),(iii),(iv)

Answer: (C) (i),(ii) · Key from source paper

Q342 AIEEE 2012 · 12 May · Online MCQ

In a sensitive meter bridge apparatus the bridge wire should possess

(A) high resistivity and low temperature coefficient.
(B) low resistivity and high temperature coefficient.
(C) low resistivity and low temperature coefficient.
(D) high resistivity and high temperature coefficient.

Answer: (A) high resistivity and low temperature coefficient. · Key from source paper

EdLoop JEE

Q343 AIEEE 2012 · 7 May · Online MCQ

This question has Statement 1 and Statement 2. Of the four choices given after the Statements, choose the one that best describes the two Statements. Statement 1: The possibility of an electric bulb fusing is higher at the time of switching ON. Statement 2: Resistance of an electric bulb when it is not lit up is much smaller than when it is lit up.

(A) Statement 1 is true, Statement 2 is false
(B) Statement 1 is false, Statement 2 is true, Statement 2 is not a correct explanation of Statement 1.
(C) Statement 1 is true, Statement 2 is true, Statement 2 is a correct explanation of Statement 1.
(D) Statement 1 is false, Statement 2 is true.

Answer: (C) Statement 1 is true, Statement 2 is true, Statement 2 is a correct explanation of Statement 1. · Key from source paper

Q344 AIEEE 2012 · Offline MCQ

Two electric bulbs marked $25\ \mathrm{W} - 220\ \mathrm{V}$ and $100\ \mathrm{W} - 220\ \mathrm{V}$ are connected in series to a $440\ \mathrm{V}$ supply. Which of the bulbs will fuse?

(A) both
(B) $100\ \mathrm{W}$
(C) $25\ \mathrm{W}$
(D) neither

Answer: (C) $25\ \mathrm{W}$ · Key from source paper

Q345 AIEEE 2011 MCQ

If a wire is stretched to make it 0.1% longer, its resistance will :

(A) increase by 0.2%
(B) decrease by 0.2%
(C) decrease by 0.05%
(D) increases by 0.05%

Answer: (A) increase by 0.2% · Key from source paper

Q346 AIEEE 2010 MCQ

Two conductors have the same resistance at $0^{\circ}\mathrm{C}$ but their temperature coefficients of resistance are α_1 and α_2. The respective temperature coefficients of their series and parallel combinations are nearly

EdLoop JEE

(A) $\frac{\alpha_1+\alpha_2}{2}, \alpha_1+\alpha_2$

(B) $\alpha_1+\alpha_2, \frac{\alpha_1+\alpha_2}{2}$

(C) $\alpha_1+\alpha_2, \frac{\alpha_1\alpha_2}{\alpha_1+\alpha_2}$

(D) $\frac{\alpha_1+\alpha_2}{2}, \frac{\alpha_1+\alpha_2}{2}$

Answer: (D) $\frac{\alpha_1+\alpha_2}{2}, \frac{\alpha_1+\alpha_2}{2}$ · Key from source paper

Q347 AIEEE 2008 MCQ

Paragraph: Consider a block of conducting material of resistivity ' ρ ' shown in the figure. Current 'I' enters at 'A' and leaves from ' D '. We apply superposition principle to find voltage ' ΔV ' developed between ' B ' and ' C '. The calculation is done in the following steps: (i) Take current 'I' entering from 'A' and assume it to spread over a hemispherical surface in the block. (ii) Calculate field $E(r)$ at distance ' r ' from A by using Ohm's law $E=\rho j$, where j is the current per unit area at ' r '. (iii) From the ' r ' dependence of $E(r)$, obtain the potential $V(r)$ at r. (iv) Repeat (i), (ii) and (iii) for current 'I' leaving ' D ' and superpose results for ' A ' and ' D '.

(see the figure above)

Question: ΔV measured between B and C is

Q19. Paragraph: Consider a block of conducting material of resistivity ' ρ ' shown in the figure. Current 'I' enters at 'A' and leaves from ' D '. We apply superposition principle to find voltage ' ΔV ' developed between ' B ' and ' C '. The calculation is done in the following steps: (i) Take current 'I' entering from 'A' and assume it to spread over a hemispherical surface in the block. (ii) Calculate field $E(r)$ at distance ' r ' from A by using Ohm's law $E=\rho j$, where j is the current per unit area at ' r '. (iii) From the ' r ' dependence of $E(r)$, obtain the potential $V(r)$ at r. (iv) Repeat (i), (ii) and (iii) for current 'I' leaving ' D ' and superpose results for ' A ' and ' D '.

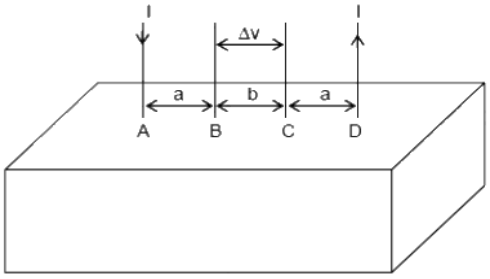

Question: ΔV measured between B and C is

(1) $\frac{\rho l}{\pi a}-\frac{\rho l}{\pi(a+b)}$

(2) $\frac{\rho l}{a}-\frac{\rho l}{(a+b)}$

(3) $\frac{\rho l}{2\pi a}-\frac{\rho l}{2\pi(a+b)}$

(4) $\frac{\rho l}{2\pi(a-b)}$

(A) $\frac{\rho l}{\pi a}-\frac{\rho l}{\pi(a+b)}$

(B) $\frac{\rho l}{a}-\frac{\rho l}{(a+b)}$

(C) $\frac{\rho l}{2\pi a}-\frac{\rho l}{2\pi(a+b)}$

(D) $\frac{\rho l}{2\pi(a-b)}$

Answer: (A) $\frac{\rho l}{\pi a}-\frac{\rho l}{\pi(a+b)}$ · Checked by our team

Q348 AIEEE 2008 MCQ

Paragraph: Consider a block of conducting material of resistivity ' ρ ' shown in the figure. Current 'I' enters at 'A' and leaves from ' D '. We apply superposition principle to find voltage ' ΔV ' developed between ' B ' and ' C '. The calculation is done in the following steps: (i) Take current 'I' entering from 'A' and assume it to spread over a hemispherical surface in the block. (ii) Calculate field $E(r)$ at distance ' r ' from A by using Ohm's law $E = \rho j$, where j is the current per unit area at ' r '. (iii) From the ' r ' dependence of $E(r)$, obtain the potential $V(r)$ at r. (iv) Repeat (i), (ii) and (iii) for current 'I' leaving ' D ' and superpose results for ' A ' and ' D '.

(see the figure above)

Question: For current entering at A, the electric field at a distance ' r ' from A is

Q20. Paragraph: Consider a block of conducting material of resistivity ' ρ ' shown in the figure. Current 'I' enters at 'A' and leaves from ' D '. We apply superposition principle to find voltage ' ΔV ' developed between ' B ' and ' C '. The calculation is done in the following steps: (i) Take current 'I' entering from 'A' and assume it to spread over a hemispherical surface in the block. (ii) Calculate field $E(r)$ at distance ' r ' from A by using Ohm's law $E = \rho j$, where j is the current per unit area at ' r '. (iii) From the ' r ' dependence of $E(r)$, obtain the potential $V(r)$ at r. (iv) Repeat (i), (ii) and (iii) for current 'I' leaving ' D ' and superpose results for ' A ' and ' D '.

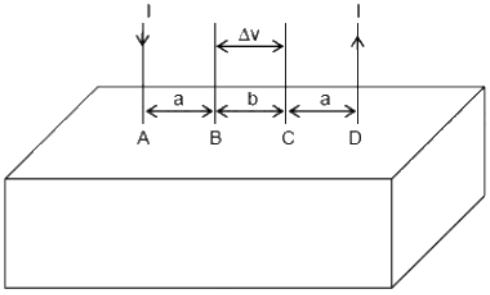

Question: For current entering at A, the electric field at a distance ' r ' from A is

(1) $\frac{\rho l}{8\pi r^2}$ (2) $\frac{\rho l}{r^2}$

(3) $\frac{\rho l}{2\pi r^2}$ (4) $\frac{\rho l}{4\pi r^2}$

(A) $\frac{\rho l}{8\pi r^2}$

(B) $\frac{\rho l}{r^2}$

(C) $\frac{\rho l}{2\pi r^2}$

(D) $\frac{\rho l}{4\pi r^2}$

Answer: (C) $\frac{\rho l}{2\pi r^2}$ · Key from source paper

Q349 AIEEE 2008 MCQ

A 5 V battery with internal resistance 2Ω and a 2 V battery with internal resistance 1Ω are connected to a 10Ω resistor as shown in the figure. The current in the 10Ω resistor is

(see the figure above)

Q21. A 5 V battery with internal resistance 2Ω and a 2 V battery with internal resistance 1Ω are connected to a 10Ω resistor as shown in the figure. The current in the 10Ω resistor is

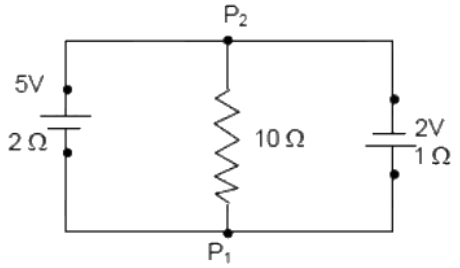

(1) $0.27AP_2$ to P_1
(2) $0.03AP_1$ to P_2
(3) $0.03AP_2$ to P_1
(4) 0.27 APP_1 to P_2

(A) $0.27AP_2$ to P_1
(B) $0.03AP_1$ to P_2
(C) $0.03AP_2$ to P_1
(D) 0.27 APP_1 to P_2 (sic)

Answer: (C) $0.03AP_2$ to P_1 · Key from source paper

Q350 AIEEE 2008 MCQ

Shown in the figure below is a meter-bridge set up with null deflection in the galvanometer.
(see the figure above)
The value of the unknown resistor R is

Q34. Shown in the figure below is a meter-bridge set up with null deflection in the galvanometer.

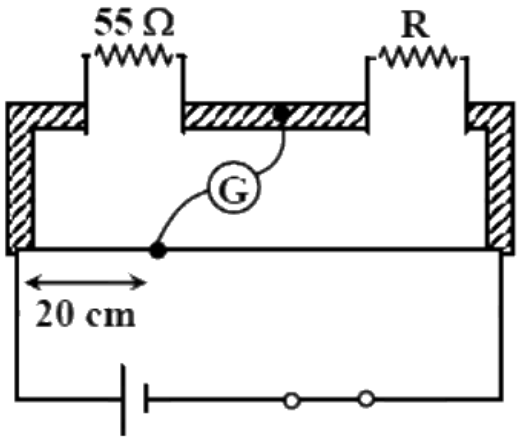

The value of the unknown resistor R is

(1) 13.75Ω
(2) 220Ω
(3) 110Ω
(4) 55Ω

(A) 13.75Ω
(B) 220Ω
(C) 110Ω
(D) 55Ω

Answer: (B) 220Ω · Key from source paper

Q351 AIEEE 2007 MCQ

The resistance of a wire is 5 ohm at 50°C and 6 ohm at 100°C. The resistance of the wire at 0°C will be

(A) 2 ohm
(B) 1 ohm
(C) 4 ohm
(D) 3 ohm

Answer: (C) 4 ohm · Key from source paper

Q352 AIEEE 2006 MCQ

A material ' B ' has twice the specific resistance of ' A '. A circular wire made of ' B ' has twice the diameter of a wire made of ' A '. Then for the two wires to have the same resistance, the ratio ℓ_A/ℓ_B of their respective lengths must be

(A) 2
(B) 1
(C) $\frac{1}{2}$
(D) $\frac{1}{4}$

Answer: (C) $\frac{1}{2}$ · Checked by our team

Q353 AIEEE 2006 MCQ

The Kirchhoff's first law $(\sum i = 0)$ and second law $(\sum iR = \sum E)$, where the symbols have their usual meanings, are respectively based on

(A) conservation of charge, conservation of energy
(B) conservation of charge, conservation of momentum
(C) conservation of energy, conservation of charge
(D) conservation of momentum, conservation of charge

Answer: (A) conservation of charge, conservation of energy · Key from source paper

Q354 AIEEE 2006 MCQ

In a Wheatstone's bridge, there resistances P, Q and R connected in the three arms and the fourth arm is formed by two resistances S_1 and S_2 connected in parallel. The condition for bridge to be

balanced will be

(A) $\frac{P}{Q}=\frac{R}{S_1+S_2}$

(B) $\frac{P}{Q}=\frac{2R}{S_1+S_2}$

(C) $\frac{P}{Q}=\frac{R(S_1+S_2)}{S_1S_2}$

(D) $\frac{P}{Q}=\frac{R(S_1+S_2)}{2\,S_1S_2}$

Answer: (C) $\frac{P}{Q}=\frac{R(S_1+S_2)}{S_1S_2}$ · Key from source paper

Q355 AIEEE 2006 MCQ

The resistance of a bulb filament is 100Ω at a temperature of $100^\circ C$. If its temperature coefficient of resistance be 0.005 per $^\circ C$, its resistance will become 200Ω at a temperature of

(A) $200^\circ C$

(B) $300^\circ C$

(C) $400^\circ C$

(D) $500^\circ C$

Answer: (B) $300^\circ C$ · Key from source paper

Q356 AIEEE 2006 MCQ

An electric bulb is rated 220 volt $-$100 watt. The power consumed by it when operated on 110 volt will be

(A) 50 watt

(B) 75 watt

(C) 40 watt

(D) 25 watt

Answer: (D) 25 watt · Key from source paper

Q357 AIEEE 2005 MCQ

A moving coil galvanometer has 150 equal divisions. Its current sensitivity is 10 divisions per milliampere and voltage sensitivity is 2 divisions per millivolt. In order that each division reads 1 volt, the resistance in ohms needed to be connected in series with the coil will be

EdLoop JEE

(A) 10^3
(B) 10^5
(C) 99995
(D) 9995

Answer: (D) 9995 · Key from source paper

Q358 AIEEE 2005 MCQ

Two voltameters one of copper and another of silver, are joined in parallel. When a total charge q flows through the voltameters, equal amount of metals are deposited. If the electrochemical equivalents of copper and silver are z_1 and z_2 respectively the charge which flows through the silver voltameter is

(A) $\frac{q}{1+\frac{z_1}{z_2}}$
(B) $\frac{q}{1+\frac{z_2}{z_1}}$
(C) $\mathrm{q}\frac{z_1}{z_2}$
(D) $\mathrm{q}\frac{z_2}{z_1}$

Answer: (B) $\frac{q}{1+\frac{z_2}{z_1}}$ · Key from source paper

Q359 AIEEE 2005 MCQ

In the circuit, the galvanometer G shows zero deflection. If the batteries A and B have negligible internal resistance, the value of the resistor R will be
(see the figure above)

Q47. In the circuit, the galvanometer G shows zero deflection. If the batteries A and B have negligible internal resistance, the value of the resistor R will be

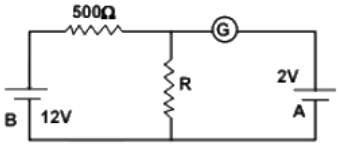

(1) 200Ω (2) 100Ω
(3) 500Ω (4) 1000Ω

(A) 200Ω
(B) 100Ω
(C) 500Ω
(D) 1000Ω

Answer: (B) 100Ω · Key from source paper

Q360 AIEEE 2005 MCQ

Two sources of equal emf are connected to an external resistance R. The internal resistance of the two sources are R_1 and R_2 ($R_2 > R_1$). If the potential difference across the source having internal

resistance R_2 is zero, then

(A) $R = R_2 \times (R_1 + R_2)/R_2 - R_1)$ (sic)
(B) $R = R_2 - R_1$
(C) $R = R_1R_2/(R_1 + R_2)$
(D) $R = R_1R_2/(R_2 - R_1)$

Answer: (B) $R = R_2 - R_1$ · Key from source paper

Q361 AIEEE 2005 MCQ

A heater coil is cut into two equal parts and only one part is now used in the heater. The heat generated will now be

(A) doubled
(B) four times
(C) one fourth
(D) halved

Answer: (A) doubled · Key from source paper

Q362 AIEEE 2005 MCQ

An energy source will supply a constant current into the load of its internal resistance is

(A) equal to the resistance of the load.
(B) very large as compared to the load resistance.
(C) zero.
(D) non-zero but less than the resistance of the load.

Answer: (B) very large as compared to the load resistance. · Key from source paper

Q363 AIEEE 2005 MCQ

In a potentiometer experiment the balancing with a cell is at length 240 cm. On shunting the cell with a resistance of 2Ω the balancing length becomes 120 cm. The internal resistance of the cell is

(A) 1Ω
(B) 0.5Ω
(C) 4Ω
(D) 2Ω

Answer: (D) 2Ω · Key from source paper

Q364 AIEEE 2005 MCQ

The resistance of hot tungsten filament is about 10 times the cold resistance. What will be the resistance of 100 W and 200 V lamp when not in use?

(A) 40Ω
(B) 20Ω
(C) 400Ω
(D) 200Ω

Answer: (A) 40Ω · Key from source paper

Q365 AIEEE 2004 MCQ

The thermistors are usually made of

(A) metals with low temperature coefficient of resistivity
(B) metals with high temperature coefficient of resistivity
(C) metal oxides with high temperature coefficient of resistivity "
(D) semiconducting materials having low temperature coefficient of resistivity.

Answer: (C) metal oxides with high temperature coefficient of resistivity " · Key from source paper

Q366 AIEEE 2004 MCQ

The total current supplied to the circuit by the battery is
(see the figure above)

Q45.

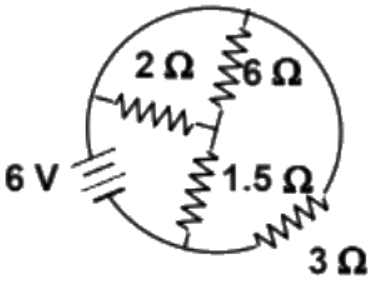

The total current supplied to the circuit by the battery is

(1) 1 A (2) 2 A
(3) $4A$ (4) 6 A

(A) 1 A
(B) 2 A
(C) $4A$
(D) 6 A

Answer: (C) $4A$ · Key from source paper

Q367 AIEEE 2004 MCQ

The resistance of the series combination of two resistances is S. When they are joined in parallel through total resistance is P. If $S = nP$, then the minimum possible value of n is

(A) 4
(B) 3
(C) 2
(D) 1

Answer: (A) 4 · Key from source paper

Q368 AIEEE 2004 MCQ

An electric current is passed through a circuit containing two wires of the same material, connected in parallel. If the length and radii of the wires are in the ratio of 4/3 and 2/3, then the ratio of the currents passing through the wire will be

(A) 3
(B) 1/3
(C) 8/9
(D) 2

Answer: (B) 1/3 · Key from source paper

Q369 AIEEE 2004 MCQ

In a metre bridge experiment null point is obtained at 20 cm from one end of the wire when resistance X is balanced against another resistance Y. If $X < Y$, then where will be the new position of the null point from the same end, if one decides to balance a resistance of $4X$ against Y?

(A) 50 cm
(B) 80 cm
(C) 40 cm
(D) 70 cm

Answer: (A) 50 cm · Key from source paper

Q370 AIEEE 2004 MCQ

The electrochemical equivalent of a metal is 3.3×10^{-7} kg per coulomb. The mass of the metal liberated at the cathode when a 3 A current is passed for 2 seconds will be

(A) 19.8×10^{-7} kg
(B) 9.9×10^{-7} kg
(C) 6.6×10^{-7} kg
(D) 1.1×10^{-7} kg

Answer: (A) 19.8×10^{-7} kg · Key from source paper

Q371 AIEEE 2004 MCQ

A piece of copper and another of germanium are cooled from room temperature to 77 K, the resistance of

(A) each of them increases
(B) each of them decreases
(C) copper decreases and germanium increases
(D) copper increases and germanium decreases

Answer: (C) copper decreases and germanium increases · Checked by our team

Q372 AIEEE 2003 MCQ

The length of a wire of a potentiometer is 100 cm, and the e.m.f. of its standard cell is E volt. It is employed to measure the e.m.f of a battery whose internal resistance is $0.5\,\Omega$. If the balance point is obtained at l = 30 cm from the positive end, the e.m.f. of the battery is

(A) $\frac{30E}{100.5}$
(B) $\frac{30E}{(100-0.5)}$
(C) $\frac{30(E-0.5i)}{100}$, where i is the current in the potentiometer wire
(D) $\frac{30E}{100}$

Answer: (D) $\frac{30E}{100}$ · Key from source paper

Q373 AIEEE 2003 MCQ

A strip of copper and another of germanium are cooled from room temperature to 80 K. The resistance of

(A) each of these decreases
(B) copper strip increases and that of germanium decreases
(C) copper strip decreases and that of germanium increases
(D) each of these increases

Answer: (C) copper strip decreases and that of germanium increases · Key from source paper

Q374 AIEEE 2003 MCQ

The negative Zn pole of a Daniell cell, sending a constant current through a circuit, decreases in mass by 0.13 g in 30 minutes. If the electrochemical equivalent of Zn and Cu are 32.5 and 31.5 respectively, the increase in the mass of the positive Cu pole in this time is

EdLoop JEE

(A) 0.180 g
(B) 0.141 g
(C) 0.126 g
(D) 0.242 g

Answer: (C) 0.126 g · Key from source paper

Q375 AIEEE 2003 MCQ

An ammeter reads up to 1 ampere. Its internal resistance is 0.81 ohm. To increase the range to 10 A the value of the required shunt is

(A) $0.03\,\Omega$
(B) $0.3\,\Omega$
(C) $0.9\,\Omega$
(D) $0.09\,\Omega$

Answer: (D) $0.09\,\Omega$ · Key from source paper

Q376 AIEEE 2003 MCQ

A 3 volt battery with negligible internal resistance is connected in a circuit as shown in the figure. The current I, in the circuit will be

(see the figure above)

Q50. A 3 volt battery with negligible internal resistance is connected in a circuit as shown in the figure. The current

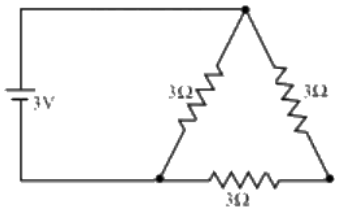

I, in the circuit will be

(1) 1 A
(2) 1.5 A
(3) 2 A
(4) 1/3 A

(A) 1 A
(B) 1.5 A
(C) 2 A
(D) 1/3 A

Answer: (B) 1.5 A · Key from source paper

Q377 AIEEE 2003 MCQ

A 220 volt, 1000 watt bulb is connected across a 110 volt mains supply. The power consumed will be

(A) 750watt
(B) 500watt
(C) 250watt
(D) 1000watt

Answer: (C) 250watt · Key from source paper

Q378 AIEEE 2003 MCQ

The length of a given cylindrical wire is increased by 100%. Due to the consequent decrease in diameter the change in the resistance of the wire will be

(A) 200%
(B) 100%
(C) 50%
(D) 300%

Answer: (D) 300% · Key from source paper

Q379 AIEEE 2002 MCQ

If an ammeter is to be used in place of a voltmeter, then we must connect with the ammeter a

(A) low resistance in parallel
(B) high resistance in parallel
(C) high resistance in series
(D) low resistance in series

Answer: (C) high resistance in series · Key from source paper

Q380 AIEEE 2002 MCQ

A wire when connected to 220 V mains supply has power dissipation P_1. Now the wire is cut into two equal pieces which are connected in parallel to the same supply. Power dissipation in this case is P_2 Then $P_2 : P_1$ is

(A) 1
(B) 4
(C) 2
(D) 3

Answer: (B) 4 · Key from source paper

Q381 AIEEE 2002 MCQ

By increasing the temperature, the specific resistance of a conductor and a semiconductor

(A) increases for both
(B) decreases for both
(C) increases, decreases
(D) decreases, increases

Answer: (C) increases, decreases · Key from source paper

Q382 AIEEE 2002 MCQ

If in the circuit, power dissipation is 150 W, then R is
(see the figure above)

Q51.

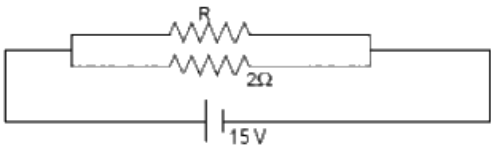

If in the circuit, power dissipation is 150 W, then R is

(1) 2Ω (2) 6Ω
(3) 5Ω (4) 4Ω

(A) 2Ω
(B) 6Ω
(C) 5Ω
(D) 4Ω

Answer: (B) 6Ω · Key from source paper

Q383 AIEEE 2002 MCQ

The mass of product liberated on anode in an electrochemical cell depends on (where t is the time period, for which the current is passed)

(A) $(It)^{1/2}$
(B) IT
(C) I/t
(D) I^2t

Answer: (B) IT · Key from source paper