EdLoop

EdLoop JEE

PHYSICS · JEE MAIN

Semiconductor Electronics

Previous Year Questions with answers

249 questions · **195** papers · **2002–2026** · newest paper first

Step-by-step solutions for every question: free in the EdLoop JEE app (Google Play) · pyq.edloop.in

What is in this PDF: every Semiconductor Electronics question we hold from past JEE Main and AIEEE papers, with its options and answer. Where an answer comes from a source other than the official final key, it says so next to the answer.

Step-by-step solutions for every question are free in the EdLoop JEE app (Google Play) and on app.edloop.in. More chapters: pyq.edloop.in/free-pdfs/

EdLoop

Chapter at a glance

4.2%	249	159 of 162	213 / 36
of Physics questions, 2019–2026	questions, 2002–2026	papers asked it, 2019–2026	MCQ / numerical, 2002–2026

Trend. Steady: 1 questions per paper in 2024–2026 against 1.3 in 2019–2023.

Questions per year

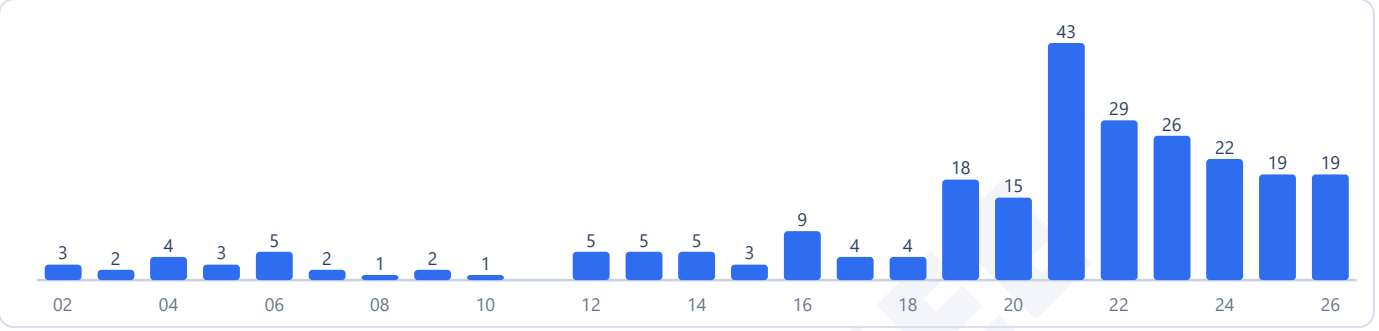

Counts are the questions we hold: 249 in 195 papers. No question in this chapter was found repeated across papers.

Most-asked topics in this chapter (2002–2026)



How often it comes up

Semiconductor electronics covers solid-state energy bands and logic gates under Unit 19: Electronic Devices in the Class 12 curriculum, holding rank 9 among the 29 physics chapters with a 4.2 percent share of the entire physics exam. In the computer-based testing era from 2019 to 2026, candidates tackled 191 questions across 162 papers, representing an average rate of 1.2 questions per test shift. The topic featured in 159 of those 162 papers, and questions appeared every single year throughout the cycle. During the recent 2024 to 2026 testing sessions, 60 questions appeared across 58 papers, maintaining an average of 1.0 question per shift and a 3.9 percent subject share. The chapter's share has stayed about the same when compared to the 2002 to 2018 period, which recorded 58 questions across 38 papers for a 4.3 percent share. In 2026 alone, examiners presented 19 questions across 19 papers, showing up in 18 separate shifts. Over the 2019 to 2026 testing span, 36 questions were set in numerical answer format, with the remainder being multiple choice problems evaluating diode networks and logic gate truth tables.

Most-asked topics

Questions in this chapter concentrate across four distinct divisions:

- **p-n Junction & Diodes**: 107 questions historically, with 85 appearing between 2019 and 2026, tested up to 2026. This core topic explores forward and reverse biased junction behavior, dynamic resistance, half-wave and full-wave rectifiers, Zener diodes operating in breakdown as voltage stabilizers, series current-limiting resistors, and light emitting diodes.
- **Logic Gates**: 82 total questions, including 68 from 2019 to 2026, tested through 2026. Problems evaluate truth tables for composite circuits made of AND, OR, NOT, NAND, and NOR gates, De Morgan's laws, Boolean algebra reductions, and realization of universal logic gates.

- **Transistors (legacy)**: 41 questions since 2002, with 29 asked between 2019 and 2026, last tested in 2023. Questions examined common emitter amplifier characteristics, current gain beta, transconductance, and doping profiles across emitter, base, and collector regions.
- **Semiconductors**: 19 lifetime questions, with 9 between 2019 and 2026, tested up to 2025. Concepts explore band theory of solids, valence and conduction bands, energy gap values, donor and acceptor impurities in silicon and germanium, and electrical conductivity relations.

What the questions look like

JEE Main tests semiconductor electronics through graphical circuit diagrams and truth table derivations:

- **Logic gate identification from network arrangements**: Multi-gate arrays composed of interconnected NOR or NAND units fed with two input signals. Students analyze Boolean expressions or test input pairs to find the single equivalent logic gate.
- **Zener diode voltage regulator calculations**: A DC supply with unregulated variable voltage powers a parallel resistive load through a Zener diode and series resistor. Calculations determine the required series resistance to protect the diode from exceeding its maximum power dissipation rating.
- **Diode branch conductances in DC bridge networks**: Networks containing ideal or real silicon diodes where students identify whether each diode is forward or reverse biased to determine active conducting branches and calculate branch currents.
- **Digital truth tables with multiple outputs**: Multi-input circuits controlling an LED connected between the outputs of two separate gate stages, evaluating which input combination illuminates the diode.

How to practise it

Master Boolean algebra and De Morgan's theorems. Converting logic circuit diagrams into Boolean algebraic expressions allows rapid algebraic simplification, saving valuable minutes compared to constructing four-row or eight-row truth tables by hand.

Understand the operational principles of diodes in DC circuits. Model an ideal forward-biased diode as a closed switch with zero resistance, and an ideal reverse-biased diode as an open switch with infinite resistance. If real barrier voltages are specified, replace a forward-biased silicon diode with a counter electromotive force source.

For Zener regulators, keep the Zener voltage fixed across the parallel load branch. The current flowing through the series resistor splits into Zener current and load current, so applying Ohm's law across the series resistor gives the required resistance.

EdLoop JEE

Q1 JEE Main 2026 · 8 Apr · Shift 2 MCQ

The output Y for the given inputs A and B to the circuit is :

(see the figure above)

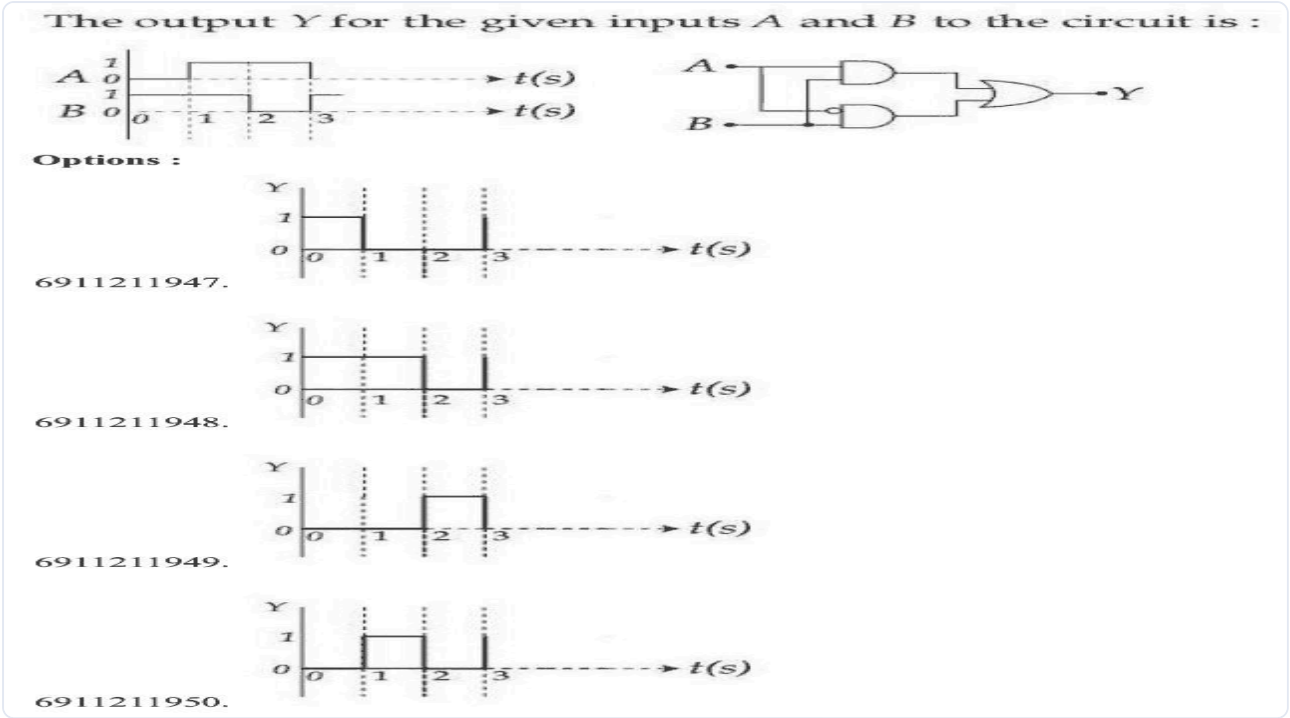

(A) *see figure*

(B) *see figure*

(C) *see figure*

(D) *see figure*

Answer: (B) · Official NTA final key

Q2 JEE Main 2026 · 6 Apr · Shift 1 MCQ

The maximum rated power of the LED is 2 mW and it is used in the circuit with input voltage of 5 V as shown in the figure below. The current through resistance R_S is 0.5 mA.

The minimum value of the resistance of R_S, to ensure that the LED is not damaged is _____ kΩ.

(see the figure above)

The maximum rated power of the LED is 2 mW and it is used in the circuit with input voltage of 5 V as shown in the figure below. The current through resistance R_S is 0.5 mA.

The minimum value of the resistance of R_S, to ensure that the LED is not damaged is _____ kΩ.

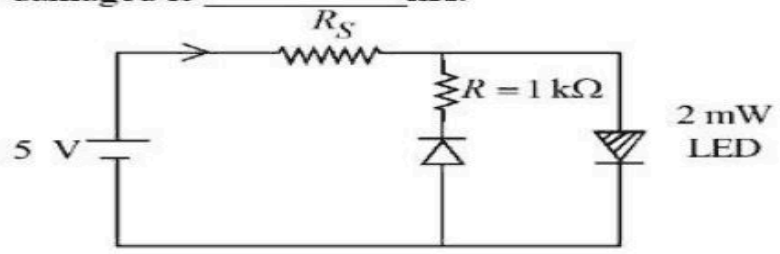

Options :

6952787633. 6

6952787634. 2

6952787635. 4

6952787636. 5

(A) 6

(B) 2

(C) 4

(D) 5

Answer: (B) 2 · Official NTA final key

Q3 JEE Main 2026 · 6 Apr · Shift 2 MCQ

Refer to the logic circuit given below. For two inputs $(A = 1, B = 1)$ and $(A = 0, B = 1)$, output (Y) will be _____.

(see the figure above)

Refer to the logic circuit given below. For two inputs $(A=1, B=1)$ and $(A=0, B=1)$, output (Y) will be _____.

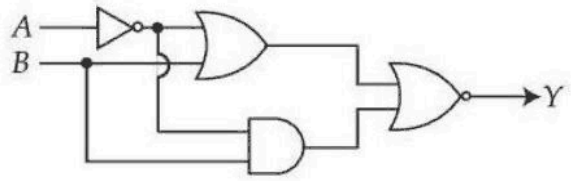

Options :

6911214234. 1, 0 respectively

6911214235. 0, 1 respectively

6911214236. 0, 0 respectively

6911214237. 1, 1 respectively

(A) 1, 0 respectively
(B) 0, 1 respectively
(C) 0, 0 respectively
(D) 1, 1 respectively

Answer: (C) 0, 0 respectively · Official NTA final key

Q4 JEE Main 2026 · 5 Apr · Shift 1 MCQ

For the given logic circuit, which of the following inputs combination will make both LED-1 and LED-2 to glow?

(see the figure above)

For the given logic circuit, which of the following inputs combination will make both LED−1 and LED−2 to glow?

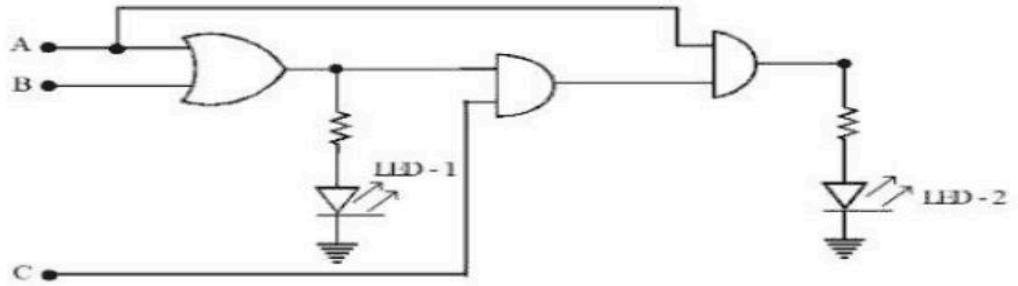

Options :

6952781182. $A = 0, B = 1, C = 1$

6952781183. $A = 1, B = 0, C = 0$

6952781184. $A = 1, B = 0, C = 1$

6952781185. $A = 1, B = 1, C = 0$

(A) $A = 0, B = 1, C = 1$

(B) $A = 1, B = 0, C = 0$

(C) $A = 1, B = 0, C = 1$

(D) $A = 1, B = 1, C = 0$

Answer: (C) $A = 1, B = 0, C = 1$ · Official NTA final key

Q5 JEE Main 2026 · 5 Apr · Shift 2 MCQ

In a semiconductor p-n diode, the doping concentrations on p-side and n-side are 10^{15} atoms/cm^3 and 10^{18} atoms/cm^3, respectively. Which one of the following statements is true ?

(A) Widths of depletion region on either side of the interface are equal

(B) The depletion region width is more on p-side compared to that in n-side

(C) The depletion region width is more on n-side compared to that in p-side

(D) No depletion region forms because of unequal doping concentrations on p and n-sides

Answer: (B) The depletion region width is more on p-side compared to that in n-side · Official NTA final key

---

Q6 JEE Main 2026 · 4 Apr · Shift 1 MCQ

Two 4 bits binary numbers, $A = 1101$ and $B = 1010$ are given in the inputs of a logic circuit shown in figure below. The output (Y) will be :

(see the figure above)

Two 4 bits binary numbers, $A = 1101$ and $B = 1010$ are given in the inputs of a logic circuit shown in figure below. The output (Y) will be :

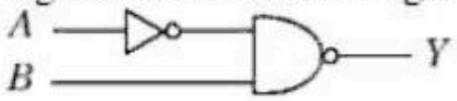

Options :

695278899. $Y = 1101$

695278900. $Y = 0010$

695278901. $Y = 0111$

695278902. $Y = 1000$

(A) $Y = 1101$
(B) $Y = 0010$
(C) $Y = 0111$
(D) $Y = 1000$

Answer: (A) $Y = 1101$ · Official NTA final key

Q7 JEE Main 2026 · 4 Apr · Shift 2 MCQ

Given below are two statements: one is labelled as **Assertion A** and the other is labelled as **Reason R**

Assertion A: A diode under reverse-biased condition provides very small current which is nearly independent of voltage until a critical limit at which the current increases drastically.

Reason R: Below the critical voltage limit, only majority charge carriers flow which increases drastically above critical voltage.

choose the *__correct__* answer from the options given below

(A) Both **A** and **R** are true and **R** is the correct explanation of **A**
(B) Both **A** and **R** are true but **R** is **NOT** the correct explanation of **A**
(C) **A** is true but **R** is false
(D) **A** is false but **R** is true

Answer: (C) A is true but R is false · Official NTA final key

---

Q8 JEE Main 2026 · 4 Apr · Shift 2 Numerical

A diode has Zener voltage of 10 V and maximum power dissipation of 0.5 W, then the minimum resistance to be used in series with this diode for safety when it is connected to a 25 V power supply is _____ Ω.

Numerical value type: the answer is a number.

Answer: 300. · Official NTA final key

Q9 JEE Main 2026 · 2 Apr · Shift 1 MCQ

For the given circuit (shown in part (A)) the time dependent input voltage $v_{in}(t)$ and corresponding output $v_o(t)$ are shown in part (B) and part (C), respectively. Identify the components that are used in the circuit between points X and Y.

(see the figure above)

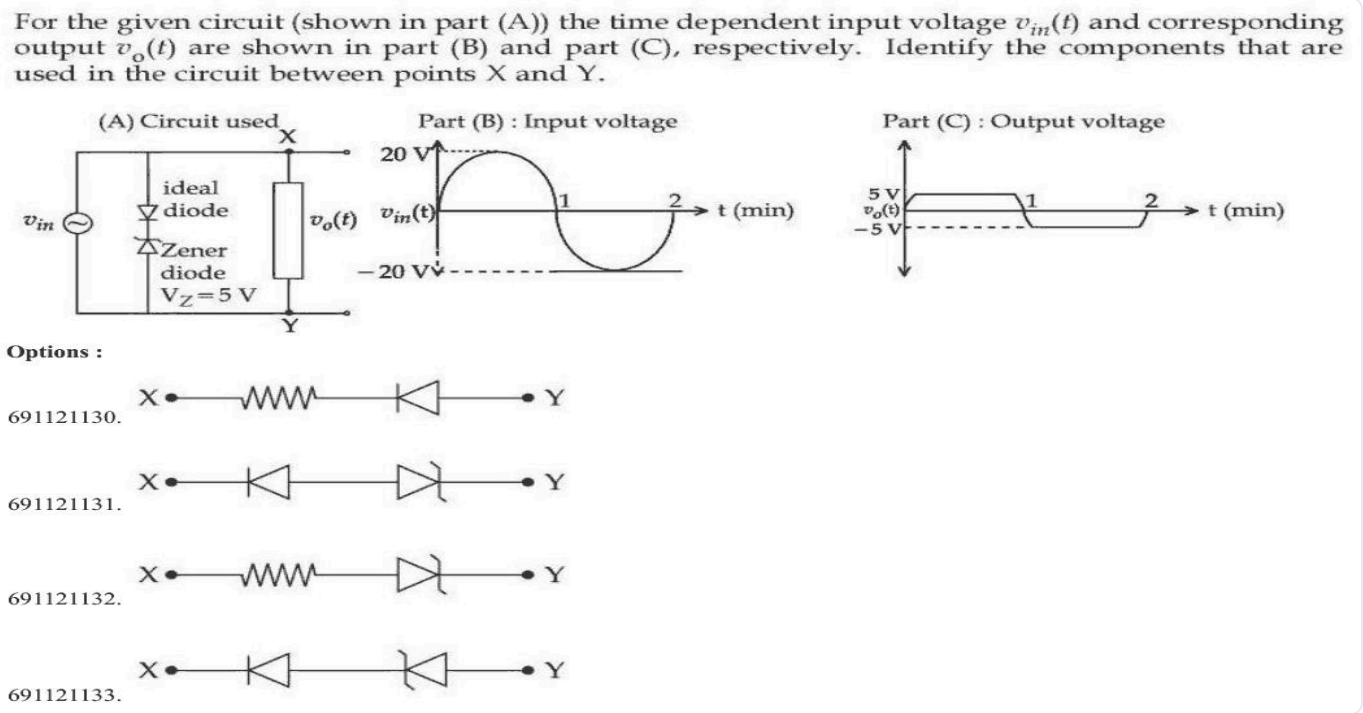

(A) *see figure*
(B) *see figure*
(C) *see figure*
(D) *see figure*

Answer: (B) · Official NTA final key

Q10 JEE Main 2026 · 2 Apr · Shift 2 MCQ

If X and Y are the inputs, the given circuit works as _____.

(see the figure above)

If X and Y are the inputs, the given circuit works as _____.

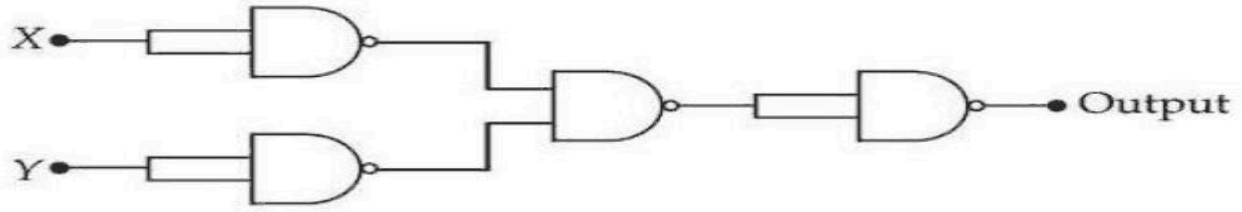

Options :

691121612. OR gate

691121613. AND gate

691121614. NAND gate

691121615. NOR gate

(A) OR gate
(B) AND gate
(C) NAND gate
(D) NOR gate

Answer: (D) NOR gate · Official NTA final key

Q11 JEE Main 2026 · 28 Jan · Shift 1 MCQ

Assuming in forward bias condition there is a voltage drop of 0.7 V across a silicon diode, the current through diode D_1 in the circuit is _____ mA.

(Assume all diodes in the given circuit are identical)

(see the figure above)

Q.39 Assuming in forward bias condition there is a voltage drop of 0.7 V across a silicon diode, the current through diode D_1 in the circuit is _____mA.
(Assume all diodes in the given circuit are identical)

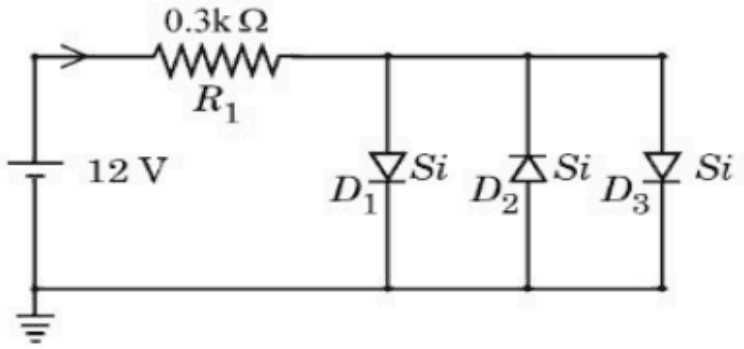

Options 1. 11.7
2. 17.6
3. 20.15
4. 18.8

(A) 11.7
(B) 17.6
(C) 20.15
(D) 18.8

Answer: (D) 18.8 · Official NTA final key

Q12 JEE Main 2026 · 28 Jan · Shift 2 MCQ

Two p-n junction diodes D_1 and D_2 are connected as shown in figure. A and B are input signals and C is the output. The given circuit will function as a _____.

(see the figure above)

Q.32 Two p-n junction diodes D_1 and D_2 are connected as shown in figure. A and B are input signals and C is the output. The given circuit will function as a _____.

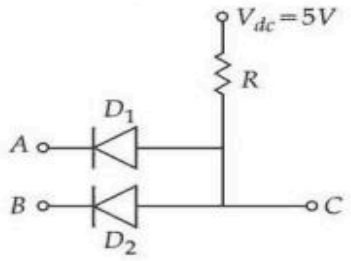

Options

1. NOR Gate
2. NAND Gate
3. AND Gate
4. OR Gate

(A) NOR Gate
(B) NAND Gate
(C) AND Gate
(D) OR Gate

Answer: (C) AND Gate · Official NTA final key

Q13 JEE Main 2026 · 24 Jan · Shift 1 · Numerical

A voltage regulating circuit consisting of Zener diode, having break-down voltage of 10 V and maximum power dissipation of 0.4 W, is operated at 15 V. The approximate value of protective resistance in this circuit is _____ Ω.

Numerical value type: the answer is a number.

Answer: 125. · Official NTA final key

Q14 JEE Main 2026 · 24 Jan · Shift 2 · MCQ

Identify the correct truth table of the given logic circuit.

(see the figure above)

Q.37 Identify the correct truth table of the given logic circuit.

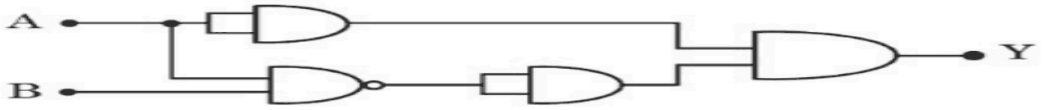

Options

1.

A	B	Y
0	0	0
0	1	0
1	0	1
1	1	0

2.

A	B	Y
0	0	0
0	1	1
1	0	1
1	1	0

3.

A	B	Y
0	0	1
0	1	0
1	0	1
1	1	0

4.

A	B	Y
0	0	1
0	1	1
1	0	1
1	1	0

EdLoop JEE

(A)

A	B	Y
0	0	0
0	1	0
1	0	1
1	1	0

(B)

A	B	Y
0	0	0
0	1	1
1	0	1
1	1	0

(C)

A	B	Y
0	0	1
0	1	0
1	0	1
1	1	0

(D)

A	B	Y
0	0	1
0	1	1
1	0	1
1	1	0

Answer: (A)

A	B	Y
0	0	0
0	1	0
1	0	1
1	1	0

· Official NTA final key

Q15 JEE Main 2026 · 23 Jan · Shift 1 MCQ

The following diagram shows a Zener diode as a voltage regulator. The Zener diode is rated at $V_z = 5$ V and the desired current in load is 5 mA. The unregulated voltage source can supply upto 25 V. Considering the Zener diode can withstand four times of the load current, the value of resistor R_s (shown in circuit) should be _____ Ω.

(see the figure above)

Q.31 The following diagram shows a Zener diode as a voltage regulator. The Zener diode is rated at $V_z = 5$ V and the desired current in load is 5 mA. The unregulated voltage source can supply upto 25 V. Considering the Zener diode can withstand four times of the load current, the value of resistor R_s (shown in circuit) should be _____ Ω.

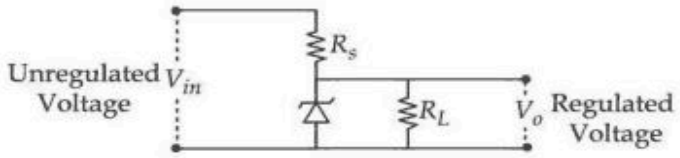

Options

1. 100
2. 10
3. 4000
4. 1000

(A) 100
(B) 10
(C) 4000
(D) 1000

Dropped by NTA. Full marks to everyone. · Official NTA final key

Q16 JEE Main 2026 · 23 Jan · Shift 2 MCQ

For the given logic gate circuit, which of the following is the correct truth table ?

(see the figure above)

Q.27 For the given logic gate circuit, which of the following is the correct truth table ?

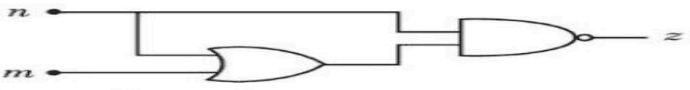

Options

1.

n	m	z
0	0	0
0	1	1
1	1	0
1	0	1

2.

n	m	z
0	0	1
0	1	1
1	1	0
1	0	0

3.

n	m	z
0	0	1
0	1	0
1	1	1
1	0	0

4.

n	m	z
0	0	1
0	1	0
1	1	0
1	0	0

(A)

n	m	z
0	0	0
0	1	1
1	1	0
1	0	1

(B)

n	m	z
0	0	1
0	1	1
1	1	0
1	0	0

(C)

n	m	z
0	0	1
0	1	0
1	1	1
1	0	0

(D)

n	m	z
0	0	1
0	1	0
1	1	0
1	0	0

Answer: (B)

n	m	z
0	**0**	**1**
0	**1**	**1**
1	**1**	**0**
1	**0**	**0**

· Official NTA final key

Q17 JEE Main 2026 · 22 Jan · Shift 1 MCQ

Find the correct combination of A, B, C and D inputs which can cause the LED to glow.

(see the figure above)

Q.39 Find the correct combination of A, B, C and D inputs which can cause the LED to glow.

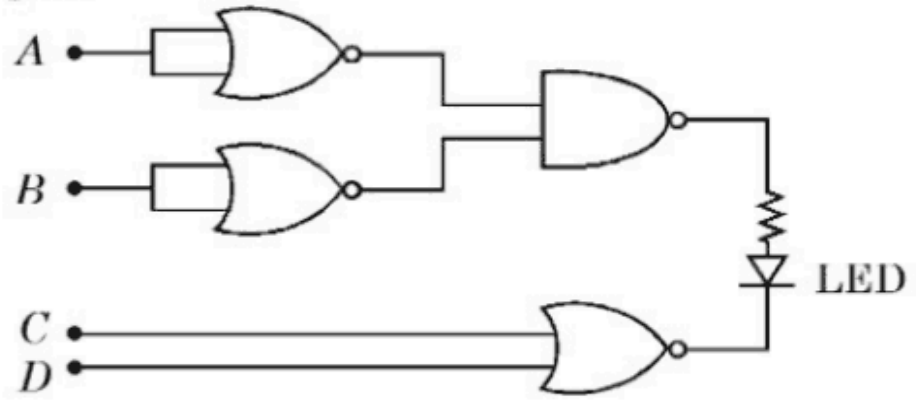

Options
1. 0100
2. 1000
3. 0011
4. 1101

(A) 0100
(B) 1000
(C) 0011
(D) 1101

Answer: (D) 1101 · Official NTA final key

Q18 JEE Main 2026 · 22 Jan · Shift 2 MCQ

The correct truth table for the given input data of the following logic gate is :

Inputs

(see the figure above)

Q.28 The correct truth table for the given input data of the following logic gate is :



Options

1.

Inputs				Output
A	B	C	D	Y
1	1	0	1	1
0	0	1	1	0
1	0	1	0	0
1	1	1	1	1

2.

Inputs				Output
A	B	C	D	Y
1	1	0	1	1
0	0	1	1	0
1	0	1	0	1
1	1	1	1	0

3.

Inputs				Output
A	B	C	D	Y
1	1	0	1	0
0	0	1	1	0
1	0	1	0	1
1	1	1	1	1

4.

Inputs				Output
A	B	C	D	Y
1	1	0	1	0
0	0	1	1	1
1	0	1	0	1
1	1	1	1	1

EdLoop JEE

(A)

A	B	C	D	Y
1	1	0	1	1
0	0	1	1	0
1	0	1	0	0
1	1	1	1	1

(B)

A	B	C	D	Y
1	1	0	1	1
0	0	1	1	0
1	0	1	0	1
1	1	1	1	0

(C)

A	B	C	D	Y
1	1	0	1	0
0	0	1	1	0
1	0	1	0	1
1	1	1	1	1

(D)

A	B	C	D	Y
1	1	0	1	0
0	0	1	1	1
1	0	1	0	1
1	1	1	1	1

Answer: (A)

A	B	C	D	Y
1	1	0	1	1
0	0	1	1	0
1	0	1	0	0
1	1	1	1	1

· Official NTA final key

Q19 JEE Main 2026 · 21 Jan · Shift 1 MCQ

The given circuit works as :

(see the figure above)

Q.43 The given circuit works as :

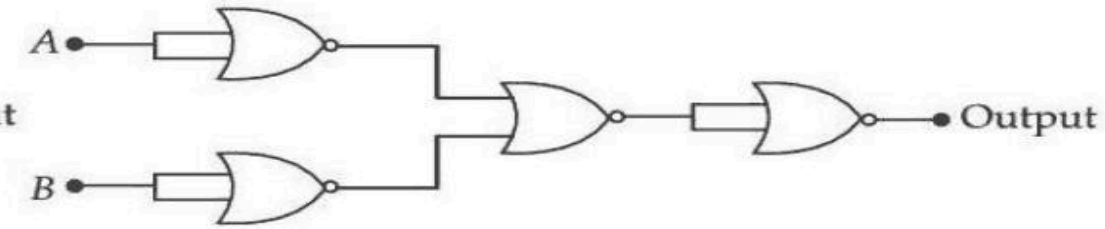

Options

1. NOR gate
2. OR gate
3. AND gate
4. NAND gate

(A) NOR gate
(B) OR gate
(C) AND gate
(D) NAND gate

Answer: (D) NAND gate · Official NTA final key

Q20 JEE Main 2025 · 8 Apr · Shift 2 MCQ

The output voltage in the following circuit is (Consider ideal diode case)

(see the figure above)

7. The output voltage in the following circuit is (Consider ideal diode case)

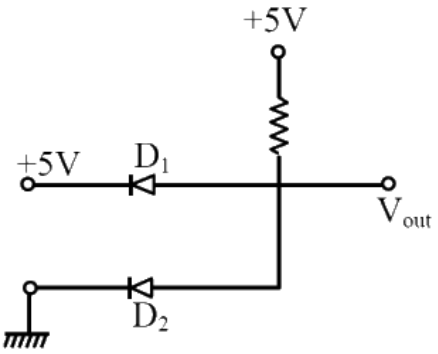

(1) +5 V (2) 0 V (3) 10 V (4) –5 V

(A) +5 V
(B) 0 V
(C) 10 V
(D) –5 V

Answer: (B) 0 V · Key from source paper

Q21 JEE Main 2025 · 7 Apr · Shift 1 MCQ

In the following circuit, the reading of the ammeter will be

(Take Zener breakdown voltage $= 4V$)

(see the figure above)

PHYSICS **07-04-2025 (MORNING SESSION)**

10. In the following circuit, the reading of the ammeter will be

(Take Zener breakdown voltage $= 4\,\mathrm{V}$)

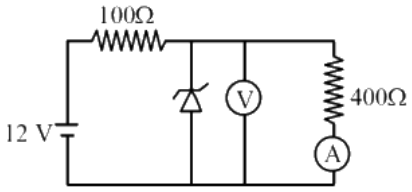

(1) 24 mA (2) 80 mA (3) 10 mA (4) 60 mA

(A) 24 mA
(B) 80 mA
(C) 10 mA
(D) 60 mA

Answer: (C) 10 mA · Key from source paper

Q22 JEE Main 2025 · 7 Apr · Shift 2 MCQ

Consider the following logic circuit.

(see the figure above)

The output is Y = 0 when :

8. Consider the following logic circuit.

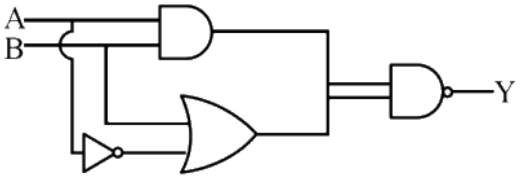

The output is Y = 0 when :

(1) $\mathrm{A} = 0$ and $\mathrm{B} = 1$ (2) $\mathrm{A} = 0$ and $\mathrm{B} = 0$

(3) $\mathrm{A} = 1$ and $\mathrm{B} = 0$ (4) $\mathrm{A} = 1$ and $\mathrm{B} = 1$

(A) A = 0 and B = 1
(B) A = 0 and B = 0
(C) A = 1 and B = 0
(D) A = 1 and B = 1

Answer: (D) A = 1 and B = 1 · Key from source paper

Q23 JEE Main 2025 · 4 Apr · Shift 1 MCQ

The Boolean expression $Y = A\overline{B}C + \overline{A}\,\overline{C}$ can be realised with which of the following gate configurations.

A. One 3-input AND gate, 3 NOT gates and one 2 -input OR gate, One 2 -input AND gate,

B. One 3-input AND gate, 1 NOT gate, One 2-input NOR gate and one 2-input OR gate

C. 3-input OR gate, 3 NOT gates and one 2-input AND gate

Choose the correct answer from the options given below:

(A) A, B, C Only
(B) A, C Only
(C) A, B Only
(D) B, C Only

Answer: (C) A, B Only · Key from source paper

Q24 JEE Main 2025 · 4 Apr · Shift 2 MCQ

Consider a n-type semiconductor in which n_e and n_h are number of electrons and holes, respectively.

(A) Holes are minority carriers

(B) The dopant is a pentavalent atom

(C) $n_e n_h \neq n_i^2$

(where n_i is number of electrons or holes in semiconductor when it is intrinsic form)

(D) $n_e n_h \geqslant n_i^2$

(E) The holes are not generated due to the donors

Choose the correct answer from the options given below :

(A) (A), (C), (D) only
(B) (A), (B), (E) only
(C) (A), (B), (C) only
(D) (A), (C), (E) only

Answer: (B) (A), (B), (E) only · Key from source paper

EdLoop JEE

Q25 JEE Main 2025 · 3 Apr · Shift 1 MCQ

Choose the correct logic circuit for the given truth table having inputs A and B .

Inputs	Output
A	B Y
0	0 0
0	1 0
1	0 1
1	1 1

(see the figure above)

3. Choose the correct logic circuit for the given truth table having inputs A and B .

Inputs		Output
A	B	Y
0	0	0
0	1	0
1	0	1
1	1	1

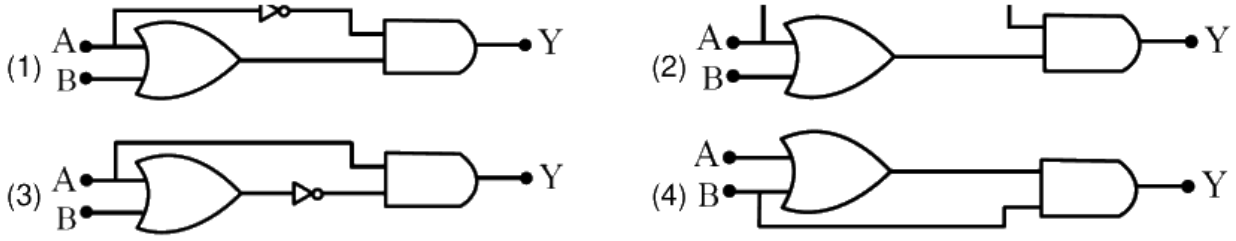

(A) *see figure*
(B) *see figure*
(C) *see figure*
(D) *see figure*

Answer: (B) · Key from source paper

Q26 JEE Main 2025 · 3 Apr · Shift 2 MCQ

The truth table corresponding to the circuit given below is :

(see the figure above)

18. The truth table corresponding to the circuit given below is :

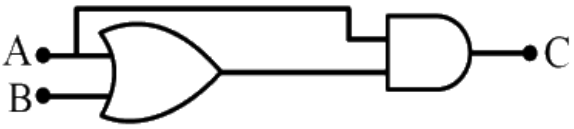

(1)

A	B	C
0	0	1
1	0	0
0	1	0
1	1	0

(2)

A	B	C
0	0	0
0	1	0
1	0	1
1	1	1

(3)

A	B	C
0	0	1
0	1	0
1	0	0
1	1	0

(4)

A	B	C
0	0	0
1	0	0
0	1	0
1	1	1

(A) Truth table with columns A, B, C and rows (A, B, C): (0, 0, 1), (1, 0, 0), (0, 1, 0), (1, 1, 0)
(B) Truth table with columns A, B, C and rows (A, B, C): (0, 0, 0), (0, 1, 0), (1, 0, 1), (1, 1, 1)
(C) Truth table with columns A, B, C and rows (A, B, C): (0, 0, 1), (0, 1, 0), (1, 0, 0), (1, 1, 0)
(D) Truth table with columns A, B, C and rows (A, B, C): (0, 0, 0), (1, 0, 0), (0, 1, 0), (1, 1, 1)

Answer: (B) Truth table with columns A, B, C and rows (A, B, C): (0, 0, 0), (0, 1, 0), (1, 0, 1), (1, 1, 1) · Key from source paper

Q27 JEE Main 2025 · 2 Apr · Shift 1 MCQ

A zener diode with 5 V zener voltage is used to regulate an unregulated dc voltage input of 25 V . For a 400Ω resistor connected in series, the zener current is found to be 4 times load current. The load current (I_L) and load resistance (R_L) are :

(A) $I_L = 0.02mA; R_L = 250\Omega$
(B) $I_L = 10mA; R_L = 500\Omega$
(C) $I_L = 20mA; R_L = 250\Omega$
(D) $I_L = 10A; R_L = 0.5\Omega$

Answer: (B) $I_L = 10mA; R_L = 500\Omega$ · Key from source paper

Q28 JEE Main 2025 · 2 Apr · Shift 2 MCQ

In the digital circuit shown in the figure, for the given inputs the P and Q values are :

(see the figure above)

20. In the digital circuit shown in the figure, for the given inputs the P and Q values are :

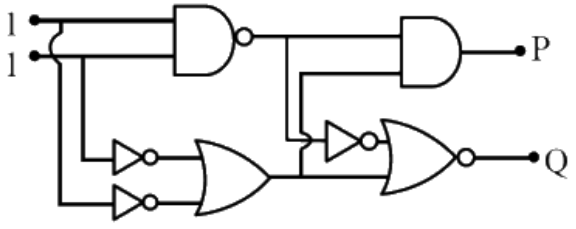

(1) $P = 0, Q = 1$ (2) $P = 0, Q = 0$ (3) $P = 1, Q = 0$ (4) $P = 1, Q = 1$

(A) $P = 0, Q = 1$
(B) $P = 0, Q = 0$
(C) $P = 1, Q = 0$
(D) $P = 1, Q = 1$

Answer: (B) $P = 0, Q = 0$ · Key from source paper

Q29 JEE Main 2025 · 29 Jan · Shift 1 MCQ

see figure

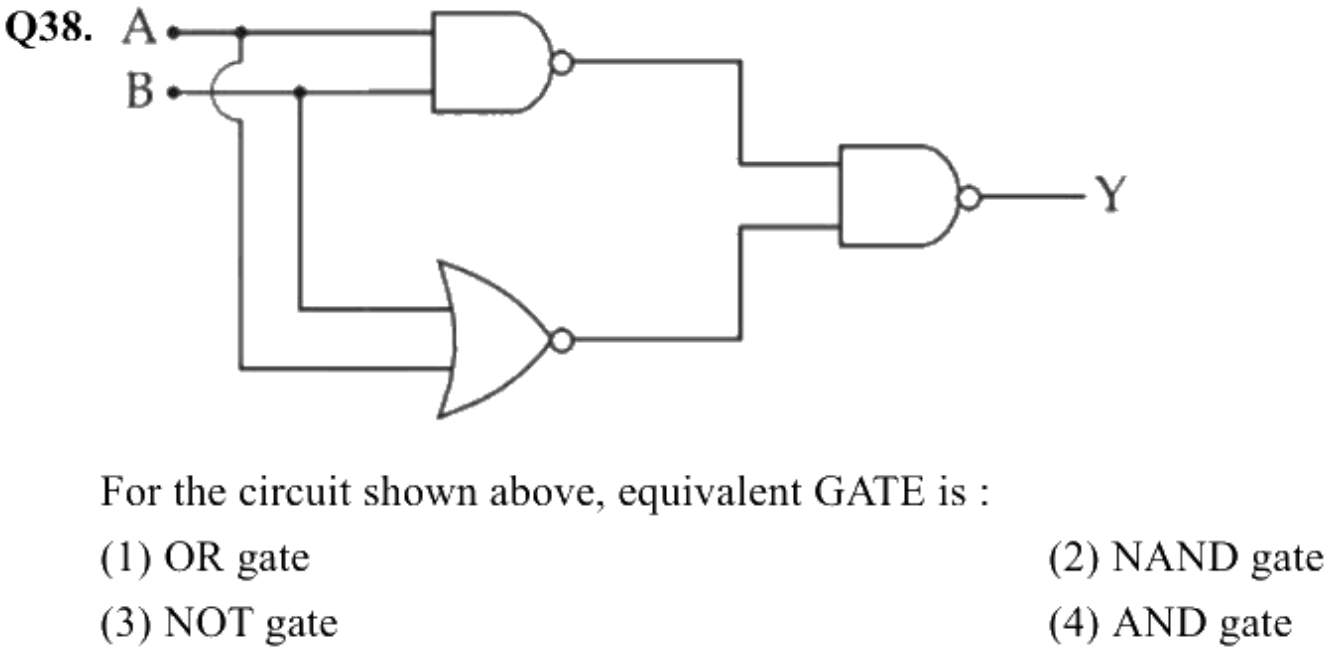

(A) OR gate
(B) NAND gate
(C) NOT gate
(D) AND gate

Answer: (A) OR gate · Key from source paper

Q30 JEE Main 2025 · 29 Jan · Shift 2 MCQ

see figure

Q30.

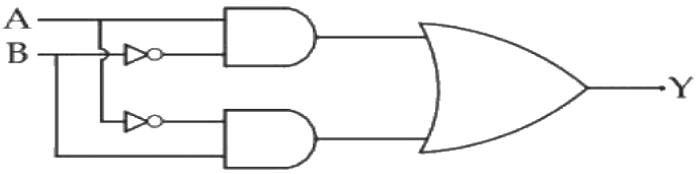

The truth table for the circuit given below is :

(1)

A	B	Y
0	0	0
1	0	0
1	1	0
0	1	1

(2)

A	B	Y
0	0	0
1	1	1
1	0	1
0	1	1

(3)

A	B	Y
0	0	0
1	0	1
0	1	0
1	1	0

(4)

A	B	Y
0	0	0
0	1	1
1	0	1
1	1	0

(A) Truth table with columns A, B, Y and rows (A, B, Y): (0, 0, 0), (1, 0, 0), (1, 1, 0), (0, 1, 1)

(B) Truth table with columns A, B, Y and rows (A, B, Y): (0, 0, 0), (1, 1, 1), (1, 0, 1), (0, 1, 1)

(C) Truth table with columns A, B, Y and rows (A, B, Y): (0, 0, 0), (1, 0, 1), (0, 1, 0), (1, 1, 0)

(D) Truth table with columns A, B, Y and rows (A, B, Y): (0, 0, 0), (0, 1, 1), (1, 0, 1), (1, 1, 0)

Answer: (D) Truth table with columns A, B, Y and rows (A, B, Y): (0, 0, 0), (0, 1, 1), (1, 0, 1), (1, 1, 0) · Key from source paper

Q31 JEE Main 2025 · 28 Jan · Shift 1 MCQ

Which of the following circuits has the same outpur as that of the given circuit?

(see the figure above)

Q43. Which of the following circuits has the same outpur as that of the given circuit?

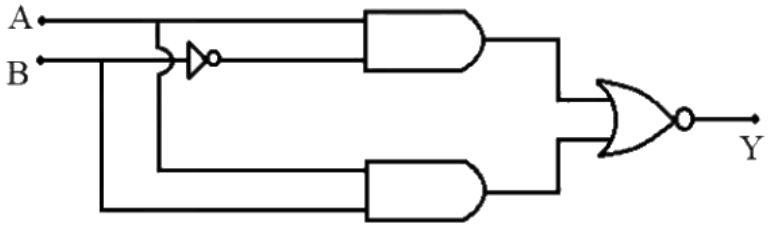

(1)

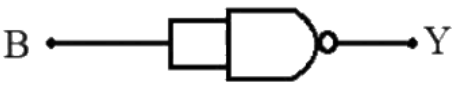

(2)

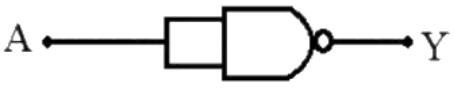

(3)

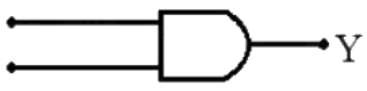

(4)

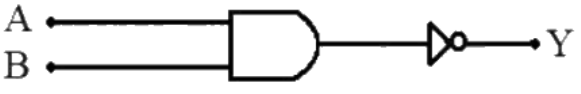

(A) *see figure*
(B) *see figure*
(C) *see figure*
(D) *see figure*

Answer: (B) · Key from source paper

Q32 JEE Main 2025 · 28 Jan · Shift 2 MCQ

see figure

Q45.

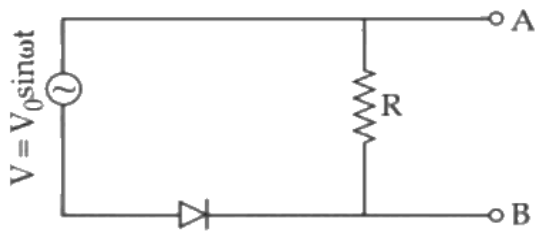

In the circuit shown here, assuming threshold voltage of diode is negligibly small, then voltage V_{AB} is correctly represented by :

(1) V_{AB} would be zero at all times

(2)

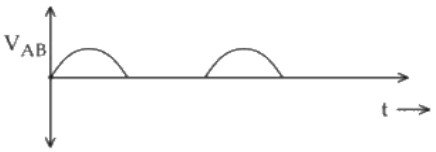

(3)

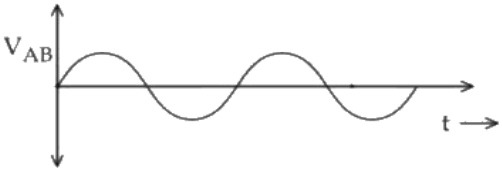

(4)

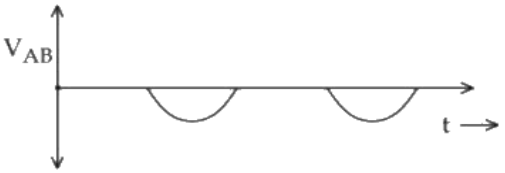

(A) V_{AB} would be zero at all times
(B) *see figure*
(C) *see figure*
(D) *see figure*

Answer: (D) · Key from source paper

Q33 JEE Main 2025 · 24 Jan · Shift 1 MCQ

Consider the following statements: A. The junction area of solar cell is made very narrow compared to a photo diode. B. Solar cells are not connected with any external bias. C. LED is made of lightly doped p-n junction. D. Increase of forward current results in continuous increase of LED light intensity. E. LEDs have to be connected in forward bias for emission of light. Choose the correct answer from the options given below:

(A) B, E Only
(B) B, D, E Only
(C) A, C Only
(D) A, C, E Only

Answer: (A) B, E Only · Key from source paper

Q34 JEE Main 2025 · 24 Jan · Shift 2 MCQ

The output of the circuit is low (zero) for :

(see the figure above)

(A) $X = 0, Y = 0$ (B) $X = 0, Y = 1$ (C) $X = 1, Y = 0$ (D) $X = 1, Y = 1$ Choose the correct answer from the options given below :

Q28. The output of the circuit is low (zero) for :

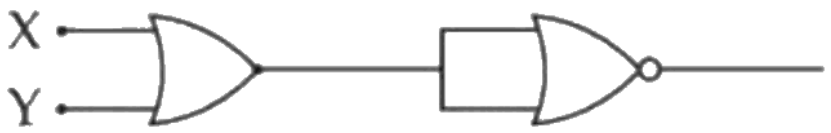

(A) $X = 0, Y = 0$ (B) $X = 0, Y = 1$ (C) $X = 1, Y = 0$ (D) $X = 1, Y = 1$ Choose the correct answer from the options given below :

(1) (B), (C) and (D) only
(2) (A), (B) and (C) only
(3) (A), (C) and (D) only
(4) (A), (B) and (D) only

(A) (B), (C) and (D) only
(B) (A), (B) and (C) only
(C) (A), (C) and (D) only
(D) (A), (B) and (D) only

Answer: (A) (B), (C) and (D) only · Key from source paper

Q35 JEE Main 2025 · 23 Jan · Shift 1 MCQ

Refer to the circuit diagram given in the figure. which of the following observations are correct? A. Total resistance of circuit is 6Ω B. Current in Ammeter is 1 A C. Potential across AB is 4 Volts. D. Potential across CD is 4 Volts E. Total resistance of the circuit is 8Ω. Choose the correct answer from the options given below:

(see the figure above)

Q30. Refer to the circuit diagram given in the figure. which of the following observations are correct? A. Total resistance of circuit is 6Ω B. Current in Ammeter is 1 A C. Potential across AB is 4 Volts. D. Potential across CD is 4 Volts E. Total resistance of the circuit is 8Ω. Choose the correct answer from the options given below:

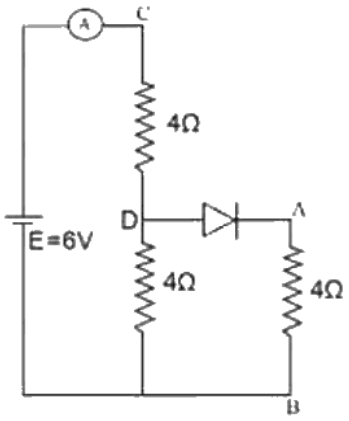

(1) A, B and D Only
(2) A, B and C Only
(3) A, C and D Only
(4) B, C and E Only

(A) A, B and D Only
(B) A, B and C Only
(C) A, C and D Only
(D) B, C and E Only

Answer: (A) A, B and D Only · Key from source paper

Q36 JEE Main 2025 · 23 Jan · Shift 2 MCQ

see figure

Q34.

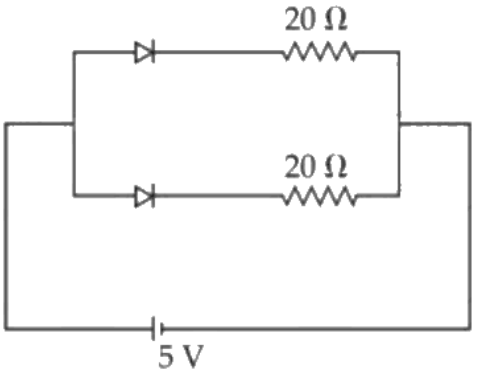

What is the current through the battery in the circuit shown below

(1) 1.5 A
(2) 0.5 A
(3) 0.25 A
(4) 1.0 A

(A) 1.5 A
(B) 0.5 A
(C) 0.25 A
(D) 1.0 A

Answer: (B) 0.5 A · Key from source paper

Q37 JEE Main 2025 · 22 Jan · Shift 1 MCQ

Which of the following circuits represents a forward biased diode?

(see the figure above)

Choose the correct answer from the options given below :

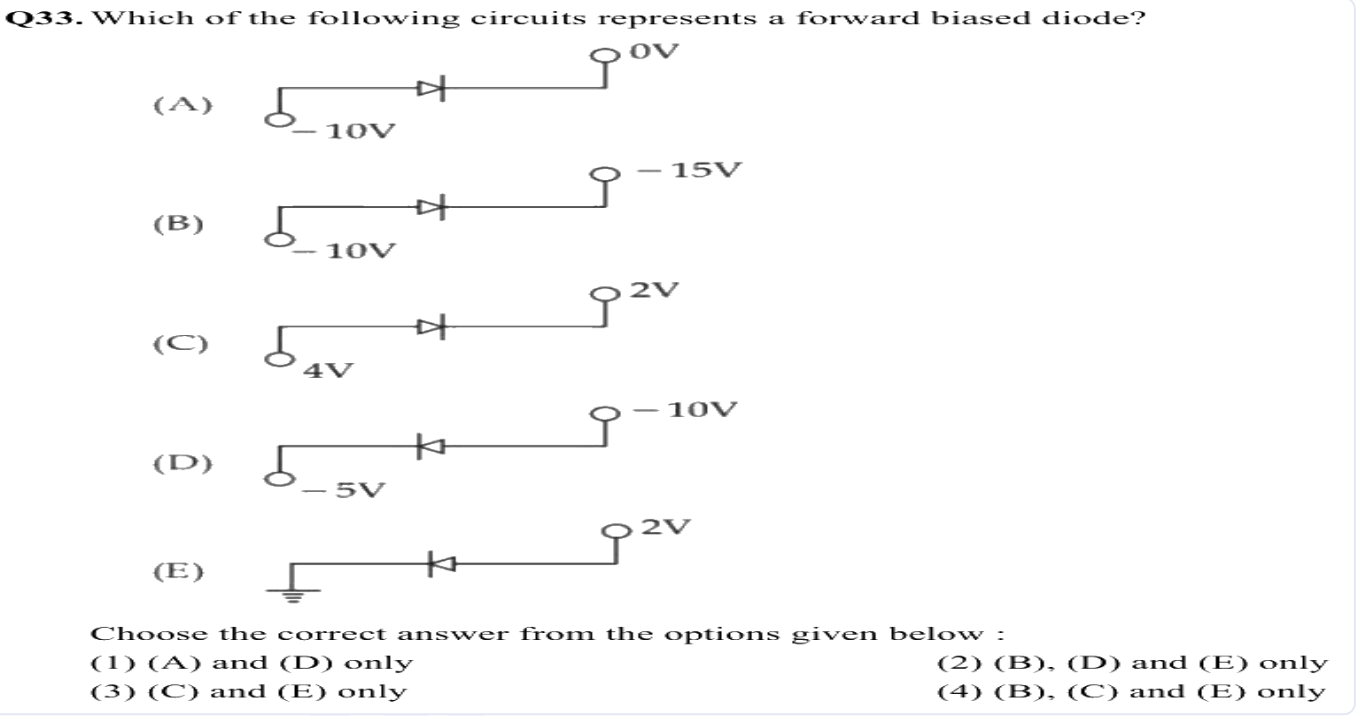

(A) (A) and (D) only
(B) (B), (D) and (E) only
(C) (C) and (E) only
(D) (B), (C) and (E) only

Answer: (D) (B), (C) and (E) only · Key from source paper

Q38 JEE Main 2025 · 22 Jan · Shift 2 MCQ

see figure

$A\ B\ Y$

0 0 1

0 1 1

1 0 0

1 1 1

To obtain the given truth table, following logic gate should be placed at G:

Q26.

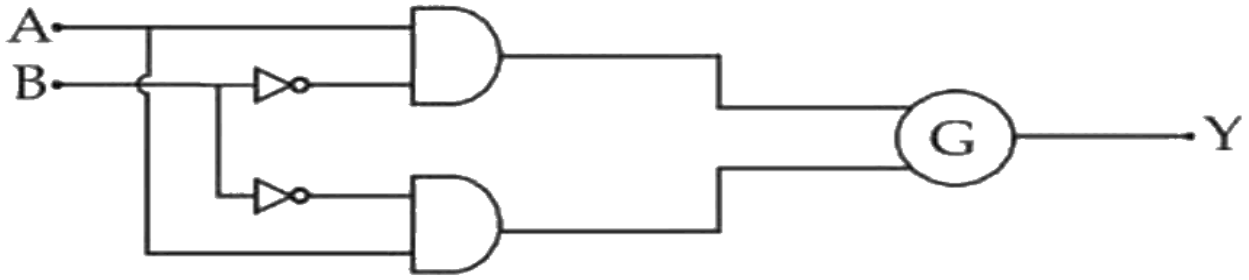

A	B	Y
0	0	1
0	1	1
1	0	0
1	1	1

To obtain the given truth table, following logic gate should be placed at G:

(1) OR Gate
(2) AND Gate
(3) NOR Gate
(4) NAND Gate

(A) OR Gate
(B) AND Gate
(C) NOR Gate
(D) NAND Gate

Answer: (C) NOR Gate · Key from source paper

Q39 JEE Main 2024 · 9 Apr · Shift 1 MCQ

A light emitting diode (LED) is fabricated using GaAs semiconducting material whose band gap is 1.42eV. The wavelength of light emitted from the LED is :

(A) 1400 nm
(B) 650 nm
(C) 875 nm
(D) 1243 nm

Answer: (C) 875 nm · Key from source paper

Q40 JEE Main 2024 · 9 Apr · Shift 2 MCQ

The $I - V$ characteristics of an electronic device shown in the figure. The device is:

(see the figure above)

Q19. The $I - V$ characteristics of an electronic device shown in the figure. The device is:

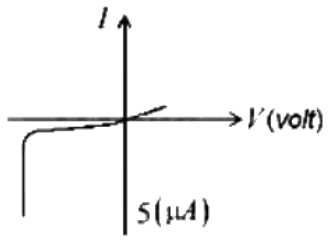

(1) a diode which can be used as a rectifier

(2) a zener diode which can be used as a voltage regulator

(3) a transistor which can be used as an amplifier

(4) a solar cell

(A) a diode which can be used as a rectifier

(B) a zener diode which can be used as a voltage regulator

(C) a transistor which can be used as an amplifier

(D) a solar cell

Answer: (B) a zener diode which can be used as a voltage regulator · Key from source paper

Q41 JEE Main 2024 · 9 Apr · Shift 2 MCQ

see figure

Q20.

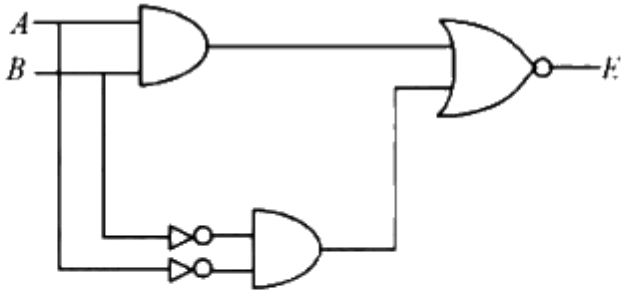

A	B	E
0	0	0
0	1	X
1	0	Y
1	1	0

In the truth table of the above circuit the value of X and Y are :

(1) 0,0

(2) 1,1

(3) 1,0

(4) 0,1

(A) 0,0

(B) 1,1

(C) 1,0

(D) 0,1

Answer: (B) 1,1 · Key from source paper

Q42 JEE Main 2024 · 8 Apr · Shift 1 MCQ

The output Y of following circuit for given inputs is :

(see the figure above)

Q19. The output Y of following circuit for given inputs is :

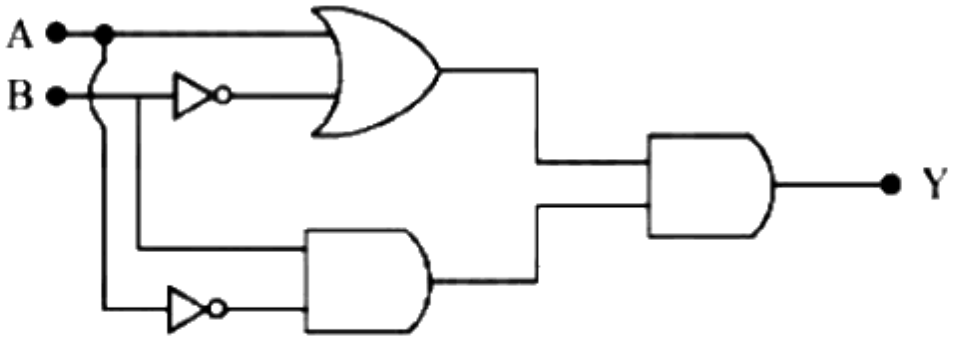

(1) $A \cdot B(A + B)$
(2) 0
(3) $\overline{A} \cdot B$
(4) $A \cdot B$

(A) $A \cdot B(A + B)$
(B) 0
(C) $\overline{A} \cdot B$
(D) $A \cdot B$

Answer: (B) 0 · Key from source paper

Q43 JEE Main 2024 · 8 Apr · Shift 2 Numerical

A potential divider circuit is connected with a dc source of 20 V, a light emitting diode of glow in voltage 1.8 V and a zener diode of breakdown voltage of 3.2 V. The length (PR) of the resistive wire is 20 cm. The minimum length of PQ to just glow the LED is _____ cm.

(see the figure above)

Q30. A potential divider circuit is connected with a dc source of 20 V, a light emitting diode of glow in voltage 1.8 V and a zener diode of breakdown voltage of 3.2 V. The length (PR) of the resistive wire is 20 cm. The

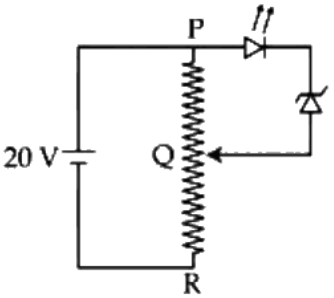

minimum length of PQ to just glow the LED is _____cm

Numerical value type: the answer is a number.

Answer: 5. · Key from source paper

Q44 JEE Main 2024 · 6 Apr · Shift 1 MCQ

The correct truth table for the following logic circuit is :

(see the figure above)

Q19. The correct truth table for the following logic circuit is :

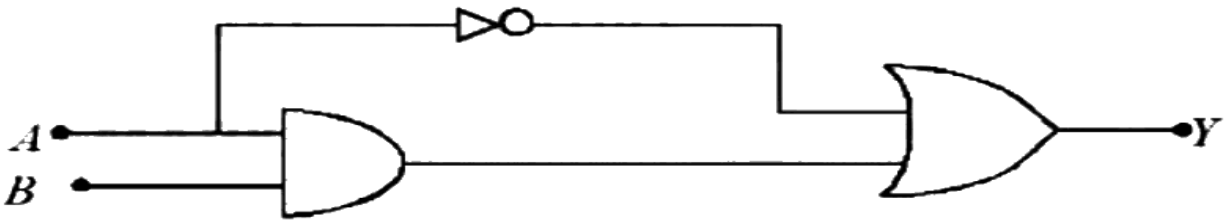

(1)

A	B	Y
0	0	1
0	1	1
1	0	0
1	1	1

(2)

A	B	Y
0	0	0
0	1	1
1	0	0
1	1	1

(3)

A	B	Y
0	0	1
0	1	1
1	0	0
1	1	0

(4)

A	B	Y
0	0	0
0	1	0
1	0	0
1	1	1

(A) *see figure*
(B) *see figure*
(C) *see figure*
(D) *see figure*

Answer: (A) · Key from source paper

Q45 JEE Main 2024 · 6 Apr · Shift 2 MCQ

The acceptor level of a p-type semiconductor is 6eV. The maximum wavelength of light which can create a hole would be : Given hc = 1242eVnm.

(A) 414 nm
(B) 103.5 nm
(C) 207 nm
(D) 407 nm

Answer: (C) 207 nm · Key from source paper

Q46 JEE Main 2024 · 5 Apr · Shift 1 MCQ

Following gates section is connected in a complete suitable circuit.

(see the figure above)
For which of the following combination, bulb will glow (ON) :

Q20. Following gates section is connected in a complete suitable circuit.

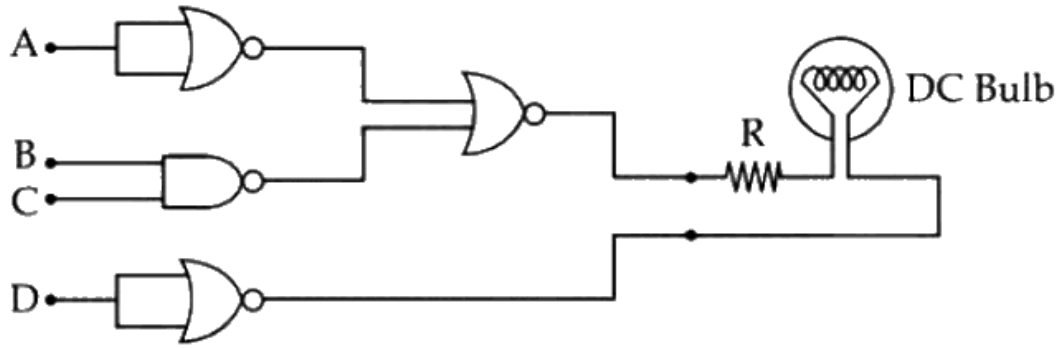

For which of the following combination, bulb will glow (ON) :

(1) $A = 0,\ B = 0, C = 0, D = 1$
(2) $A = 0,\ B = 1, C = 1, D = 1$
(3) $A = 1,\ B = 0, C = 0, D = 0$
(4) $A = 1,\ B = 1, C = 1, D = 0$

(A) A = 0, B = 0, C = 0, D = 1
(B) A = 0, B = 1, C = 1, D = 1
(C) A = 1, B = 0, C = 0, D = 0
(D) A = 1, B = 1, C = 1, D = 0

Answer: (C) A = 1, B = 0, C = 0, D = 0 · Key from source paper

---

Q47 JEE Main 2024 · 5 Apr · Shift 2 MCQ

The output (Y) of logic circuit given below is 0 only when :

(see the figure above)

Q19. The output (Y) of logic circuit given below is 0 only when :

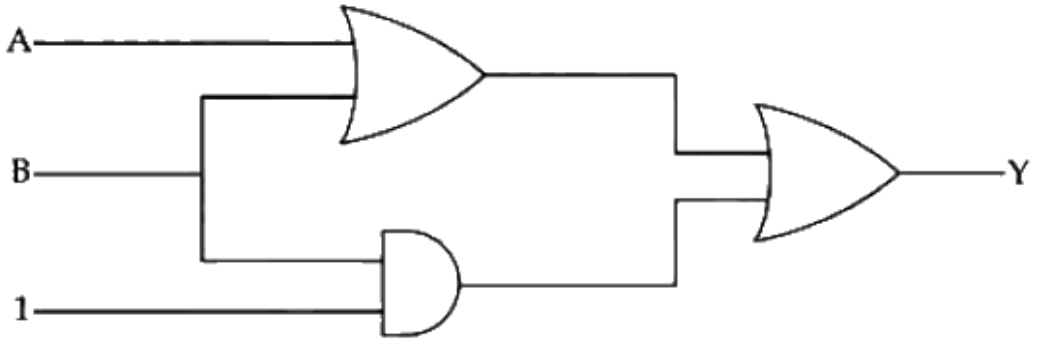

(1) $A = 1,\ B = 0$
(2) $A = 0,\ B = 1$
(3) $A = 0,\ B = 0$
(4) $A = 1,\ B = 1$

(A) A = 1, B = 0
(B) A = 0, B = 1
(C) A = 0, B = 0
(D) A = 1, B = 1

Answer: (C) A = 0, B = 0 · Key from source paper

Q48 JEE Main 2024 · 4 Apr · Shift 1 MCQ

The value of net resistance of the network as shown in the given figure is :

(see the figure above)

Q20. The value of net resistance of the network as shown in the given figure is :

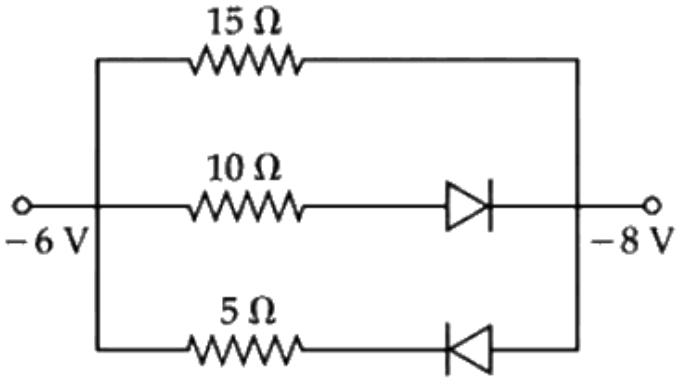

(1) 6Ω
(2) (5/2)Ω
(3) (15/4)Ω
(4) (30/11)Ω

(A) 6Ω
(B) (5/2)Ω
(C) (15/4)Ω
(D) (30/11)Ω

Answer: (A) 6Ω · Key from source paper

Q49 JEE Main 2024 · 4 Apr · Shift 2 MCQ

Identify the logic gate given in the circuit:

(see the figure above)

Q19.

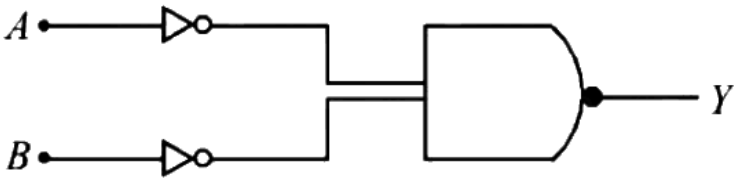

Identify the logic gate given in the circuit:

(1) NAND-gate
(2) AND gate
(3) NOR gate
(4) OR- gate

(A) NAND-gate
(B) AND gate
(C) NOR gate
(D) OR- gate

Answer: (D) OR- gate · Key from source paper

Q50 JEE Main 2024 · 4 Apr · Shift 2 MCQ

Which of the diode circuit shows correct biasing used for the measurement of dynamic resistance of p-n junction diode :

Q20. Which of the diode circuit shows correct biasing used for the measurement of dynamic resistance of p-n junction diode :

(1)
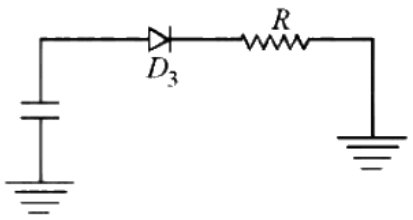

(2)
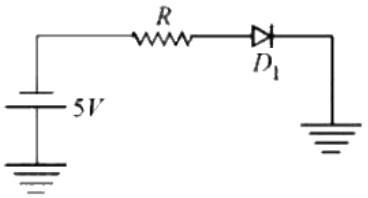

(3)
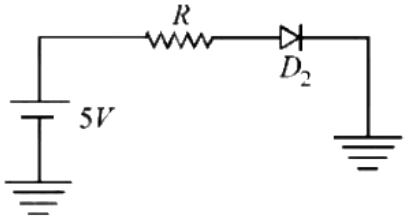

(4)
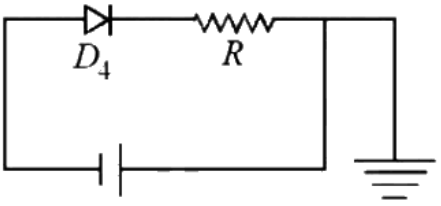

(A) *see figure*
(B) *see figure*
(C) *see figure*
(D) *see figure*

Answer: (C) · Key from source paper

Q51 JEE Main 2024 · 1 Feb · Shift 1 MCQ

In the given circuit if the power rating of Zener diode is 10 mW, the value of series resistance R_s to regulate the input unregulated supply is:

(see the figure above)

Q19. In the given circuit if the power rating of Zener diode is 10 mW, the value of series resistance R_s to regulate the input unregulated supply is:

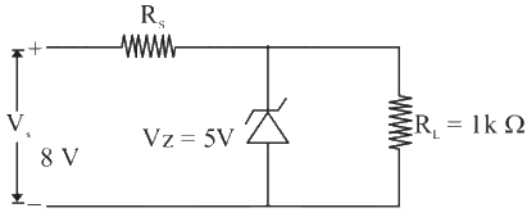

(1) $\frac{3}{7}$ $k\Omega$
(2) 10 Ω
(3) 1 $k\Omega$
(4) 10 $k\Omega$

(A) $\frac{3}{7}$ kΩ
(B) 10 Ω
(C) 1 kΩ
(D) 10 kΩ

Answer: (A) $\frac{3}{7}$ kΩ · Key from source paper

Q52 JEE Main 2024 · 1 Feb · Shift 2 MCQ

Conductivity of a photodiode starts changing only if the wavelength of incident light is less than 660 nm. The band gap of photodiode is found to be $\frac{X}{8}$ eV. The value of X is:

(Given h = 6.6×10^{-34} J s, e = 1.6×10^{-19} C)

(A) 15
(B) 11
(C) 13
(D) 21

Answer: (A) 15 · Key from source paper

Q53 JEE Main 2024 · 31 Jan · Shift 1 MCQ

Identify the logic operation performed by the given circuit.

(see the figure above)

Q20. Identify the logic operation performed by the given circuit.

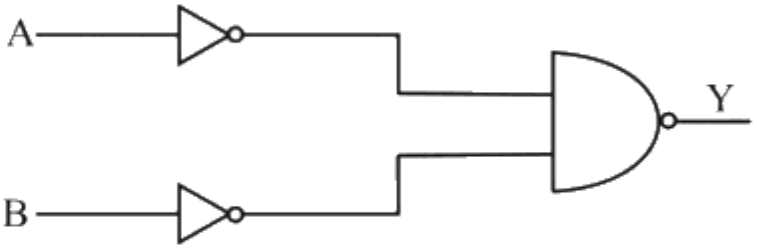

(1) NAND
(2) NOR
(3) OR
(4) AND

(A) NAND
(B) NOR
(C) OR
(D) AND

Answer: (C) OR · Key from source paper

Q54 JEE Main 2024 · 31 Jan · Shift 2 MCQ

The output of the given circuit diagram is

(see the figure above)

Q19. The output of the given circuit diagram is

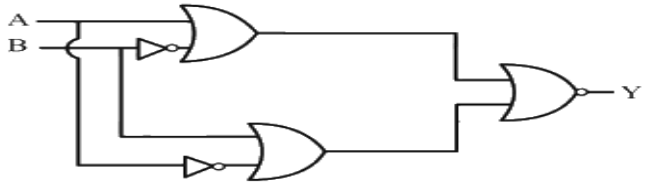

(1)

A	B	Y
0	0	0
1	0	0
0	1	0
1	1	1

(2)

A	B	Y
0	0	0
1	0	1
0	1	1
1	1	0

(3)

A	B	Y
0	0	0
1	0	0
0	1	0
1	1	0

(4)

A	B	Y
0	0	0
1	0	0
0	1	1
1	1	0

(A) *see figure*
(B) *see figure*
(C) *see figure*
(D) *see figure*

Answer: (C) · Key from source paper

Q55 JEE Main 2024 · 30 Jan · Shift 1 MCQ

A Zener diode of breakdown voltage 10 V is used as a voltage regulator as shown in the figure. The current through the Zener diode is

(see the figure above)

Q20. A Zener diode of breakdown voltage 10 V is used as a voltage regulator as shown in the figure. The current through the Zener diode is

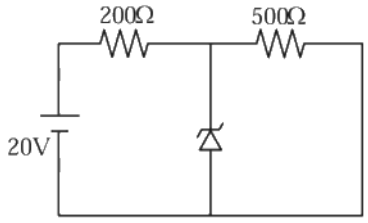

(1) 50 mA
(2) 0
(3) 30 mA
(4) 20 mA

(A) 50 mA
(B) 0
(C) 30 mA
(D) 20 mA

Answer: (C) 30 mA · Key from source paper

Q56 JEE Main 2024 · 30 Jan · Shift 2 MCQ

In the given circuit, the voltage across load resistance (R_L) is:

(see the figure above)

Q19. In the given circuit, the voltage across load resistance (R_L) is:

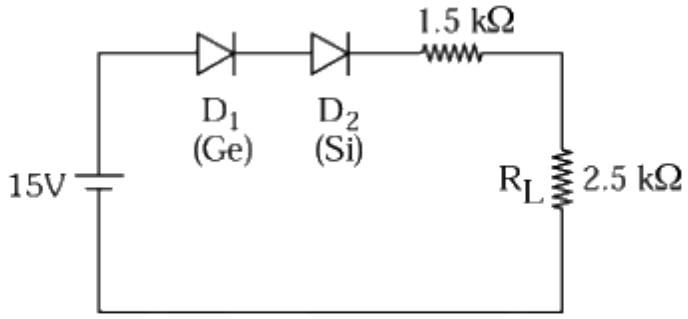

(1) 8.75 V
(2) 9.00 V
(3) 8.50 V
(4) 14.00 V

(A) 8.75 V
(B) 9.00 V
(C) 8.50 V
(D) 14.00 V

Answer: (A) 8.75 V · Key from source paper

Q57 JEE Main 2024 · 29 Jan · Shift 1 MCQ

In the given circuit, the breakdown voltage of the Zener diode is 3.0 V. What is the value of I_z ?

(see the figure above)

Q20. In the given circuit, the breakdown voltage of the Zener diode is 3.0 V. What is the value of I_z ?

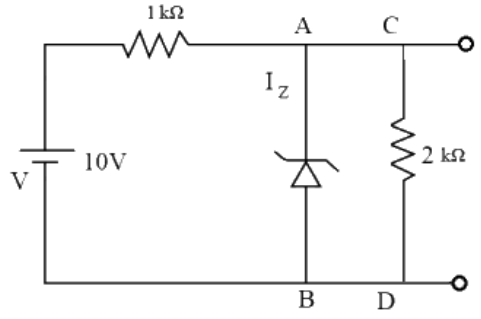

(1) 3.3 mA
(2) 5.5 mA
(3) 10 mA
(4) 7 mA

(A) 3.3 mA
(B) 5.5 mA
(C) 10 mA
(D) 7 mA

Answer: (B) 5.5 mA · Key from source paper

Q58 JEE Main 2024 · 29 Jan · Shift 2 MCQ

The truth table for this given circuit is:

(see the figure above)

Q20. The truth table for this given circuit is:

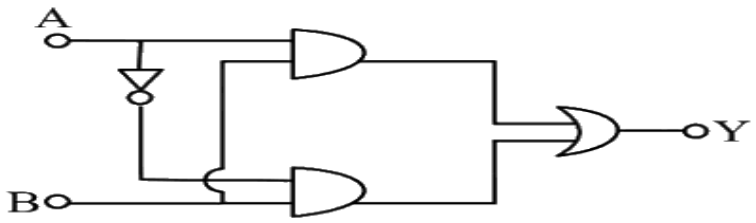

(1)

A	B	Y
0	0	1
0	1	1
1	0	1
1	1	0

(2)

A	B	Y
0	0	0
0	1	1
1	0	0
1	1	1

(3)

A	B	Y
0	0	0
0	1	0
1	0	0
1	1	1

(4)

A	B	Y
0	0	1
0	1	0
1	0	1
1	1	0

EdLoop

(A) Truth table:

A	B	Y
0	0	1
0	1	1
1	0	1
1	1	0

(B) Truth table:

A	B	Y
0	0	0
0	1	1
1	0	0
1	1	1

(C) Truth table:

A	B	Y
0	0	0
0	1	0
1	0	0
1	1	1

(D) Truth table:

A	B	Y
0	0	1
0	1	0
1	0	1
1	1	0

Answer: (B) Truth table:

A	B	Y
0	0	0
0	1	1
1	0	0
1	1	1

· Key from source paper

Q59 JEE Main 2024 · 27 Jan · Shift 1 MCQ

Which of the following circuits is reverse - biased ?

Q19. Which of the following circuits is reverse - biased ?

(1)

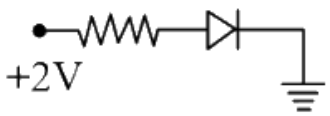

(2)

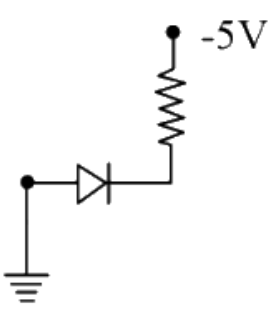

(3)

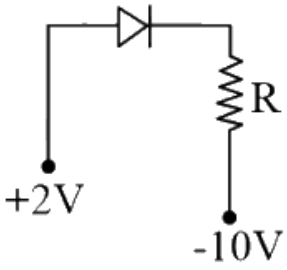

(4)

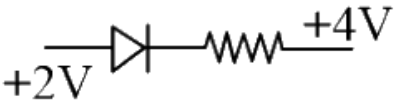

A *see figure*

B *see figure*

C *see figure*

D *see figure*

Answer: (D) · Key from source paper

Q60 JEE Main 2024 · 27 Jan · Shift 2 MCQ

The truth table of the given circuit diagram is :

(see the figure above)

Q19. The truth table of the given circuit diagram is :

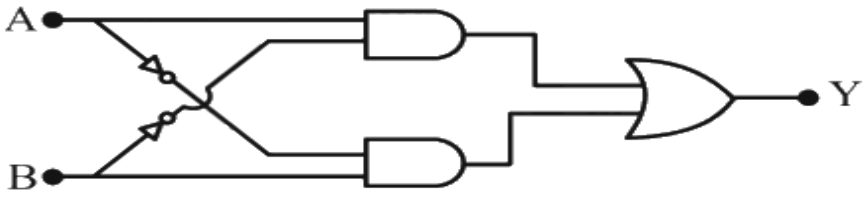

(1)

A	B	Y
0	0	1
0	1	0
1	0	0
1	1	1

(2)

A	B	Y
0	0	0
0	1	1
1	0	1
1	1	0

(3)

A	B	Y
0	0	0
0	1	0
1	0	0
1	1	1

(4)

A	B	Y
0	0	1
0	1	1
1	0	1
1	1	0

(A) *see figure*
(B) *see figure*
(C) *see figure*
(D) *see figure*

Answer: (B) · Key from source paper

Q61 JEE Main 2023 · 15 Apr · Shift 1 MCQ

In the given circuit, the current I through the battery will be

(see the figure above)

Q14. In the given circuit, the current I through the battery will be

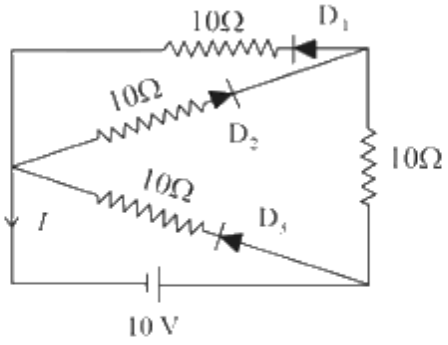

(1) 2.5 A
(2) 1 A
(3) 2 A
(4) 1.5 A

(A) 2.5 A
(B) 1 A
(C) 2 A
(D) 1.5 A

Answer: (D) 1.5 A · Key from source paper

Q62 JEE Main 2023 · 13 Apr · Shift 1 MCQ

For the following circuit and given inputs A and B, choose the correct option for output Y

(see the figure above)

Q28. For the following circuit and given inputs A and B, choose the correct option for output Y?

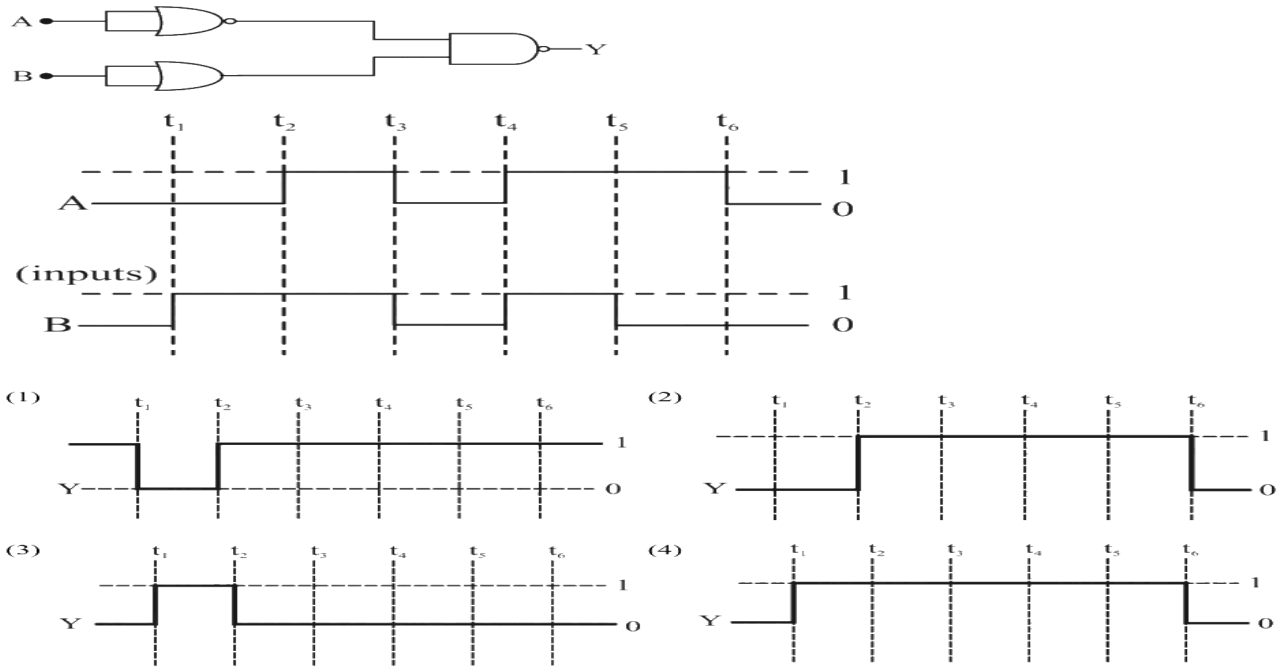

(A) (waveform drawn, see figure)

(B) (waveform drawn, see figure)

(C) (waveform drawn, see figure)

(D) (waveform drawn, see figure)

Answer: (A) (waveform drawn, see figure) · Key from source paper

Q63 JEE Main 2023 · 13 Apr · Shift 1 Numerical

From the given transfer characteristic of a transistor in CE configuration, the value of power gain of this configuration is 10^x, for R_B = 10 kΩ, and R_C = 1 kΩ. The value of x is _____.

(see the figure above)

Q29. From the given transfer characteristic of a transistor in CE configuration, the value of power gain of this configuration is 10^x, for $R_B = 10$ kΩ, and $R_C = 1$ kΩ. The value of x is _____.

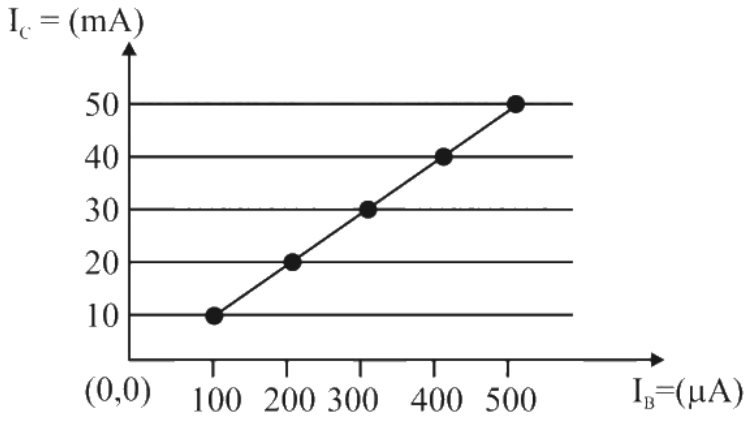

Numerical value type: the answer is a number.

Answer: 3. · Key from source paper

Q64 JEE Main 2023 · 13 Apr · Shift 2 MCQ

The output from a NAND gate having inputs A and B given below will be,

(see the figure above)

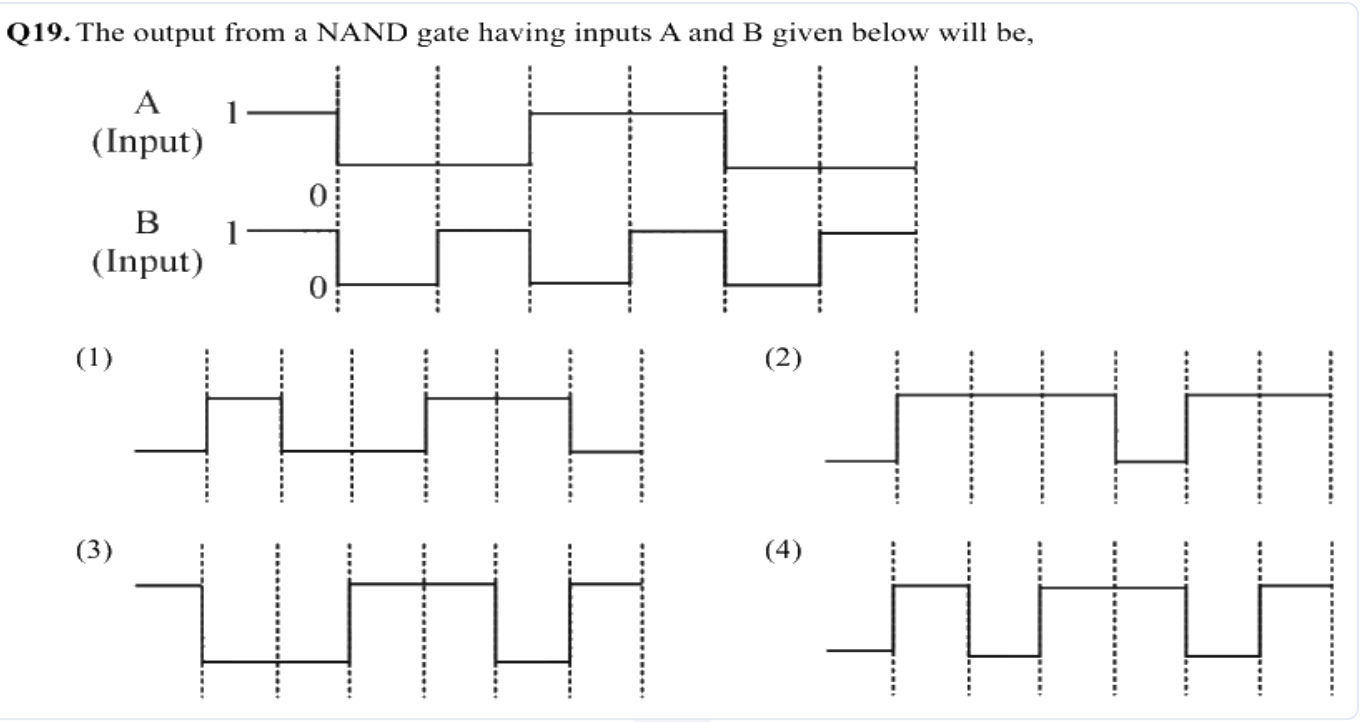

(A) (waveform drawn, see figure)
(B) (waveform drawn, see figure)
(C) (waveform drawn, see figure)
(D) (waveform drawn, see figure)

Answer: (B) (waveform drawn, see figure) · Key from source paper

Q65 JEE Main 2023 · 12 Apr · Shift 1 MCQ

In an n-p-n common emitter (CE) transistor the collector current changes from 5 mA to 16 mA for the change in base current from 100 μA and 200 μA, respectively. The current gain of transistor is _____.

(A) 110
(B) 210
(C) 0.9
(D) 9

Answer: (A) 110 · Key from source paper

Q66 JEE Main 2023 · 11 Apr · Shift 1 MCQ

The logic performed by the circuit shown in figure is equivalent to

(see the figure above)

Q19. The logic performed by the circuit shown in figure is equivalent to

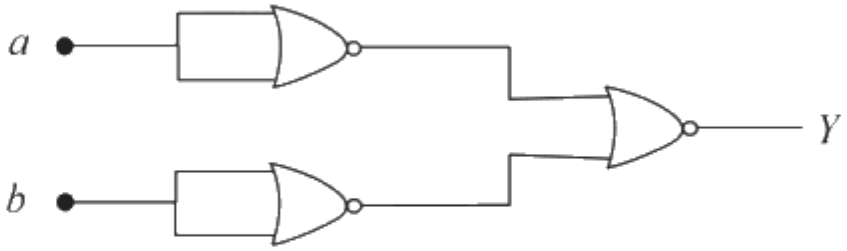

(1) AND
(2) NOR
(3) OR
(4) NAND

(A) AND
(B) NOR
(C) OR
(D) NAND

Answer: (A) AND · Key from source paper

Q67 JEE Main 2023 · 11 Apr · Shift 2 MCQ

The logic operations performed by the given digital circuit is equivalent to:

(see the figure above)

Q29. The logic operations performed by the given digital circuit is equivalent to:

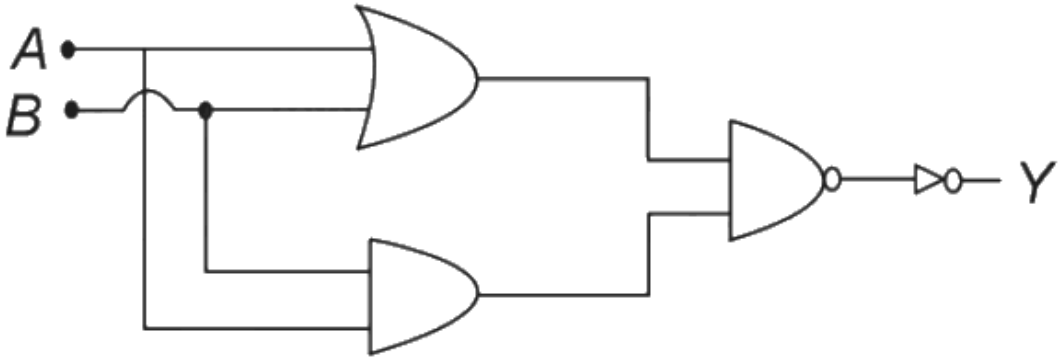

(1) NOR
(2) AND
(3) OR
(4) NAND

(A) NOR
(B) AND
(C) OR
(D) NAND

Answer: (B) AND · Key from source paper

Q68 JEE Main 2023 · 10 Apr · Shift 1 MCQ

A zener diode of power rating 1.6 W is to be used as voltage regulator. If the zener diode has a breakdown of 8 V and it has to regulate voltage fluctuating between 3 V and 10 V The value of resistance R_s for safe operation of diode will be
(see the figure above)

Q19. A zener diode of power rating 1.6 W is to be used as voltage regulator. If the zener diode has a breakdown of 8 V and it has to regulate voltage fluctuating between 3 V and 10 V The value of resistance R_s for safe operation of diode will be

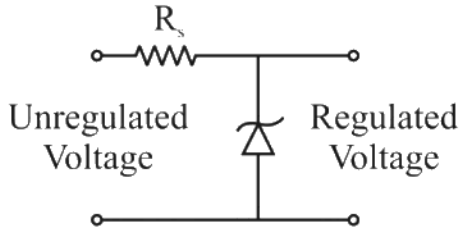

(1) $10\ \Omega$
(2) $12\ \Omega$
(3) $13.3\ \Omega$
(4) $13\ \Omega$

(A) $10\ \Omega$
(B) $12\ \Omega$
(C) $13.3\ \Omega$
(D) $13\ \Omega$

Answer: (A) $10\ \Omega$ · Key from source paper

Q69 JEE Main 2023 · 10 Apr · Shift 2 MCQ

If each diode has a forward bias resistance of 25Ω in the below circuit,
(see the figure above)
Which of the following options is correct?

Q18. If each diode has a forward bias resistance of 25Ω in the below circuit,

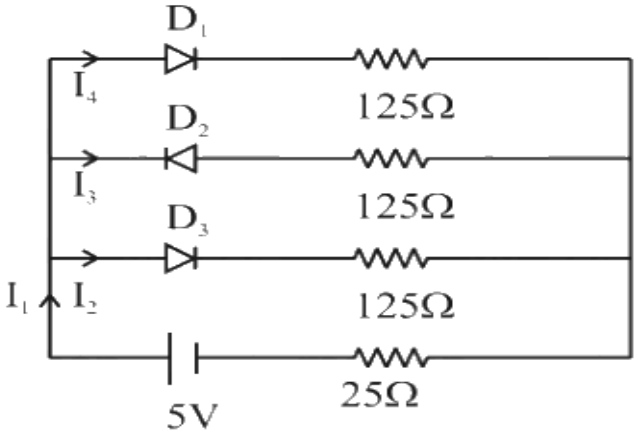

Which of the following options is correct?

(1) $\frac{I_1}{I_2} = 1$

(2) $\frac{I_2}{I_3} = 1$

(3) $\frac{I_1}{I_2} = 2$

(4) $\frac{I_3}{I_4} = 1$

(A) $\frac{I_1}{I_2} = 1$

(B) $\frac{I_2}{I_3} = 1$

(C) $\frac{I_1}{I_2} = 2$

(D) $\frac{I_3}{I_4} = 1$

Answer: (C) $\frac{I_1}{I_2} = 2$ · Key from source paper

Q70 JEE Main 2023 · 8 Apr · Shift 1 MCQ

For the logic circuit shown, the output waveform at Y is

(see the figure above)

Q29. For the logic circuit shown, the output waveform at Y is

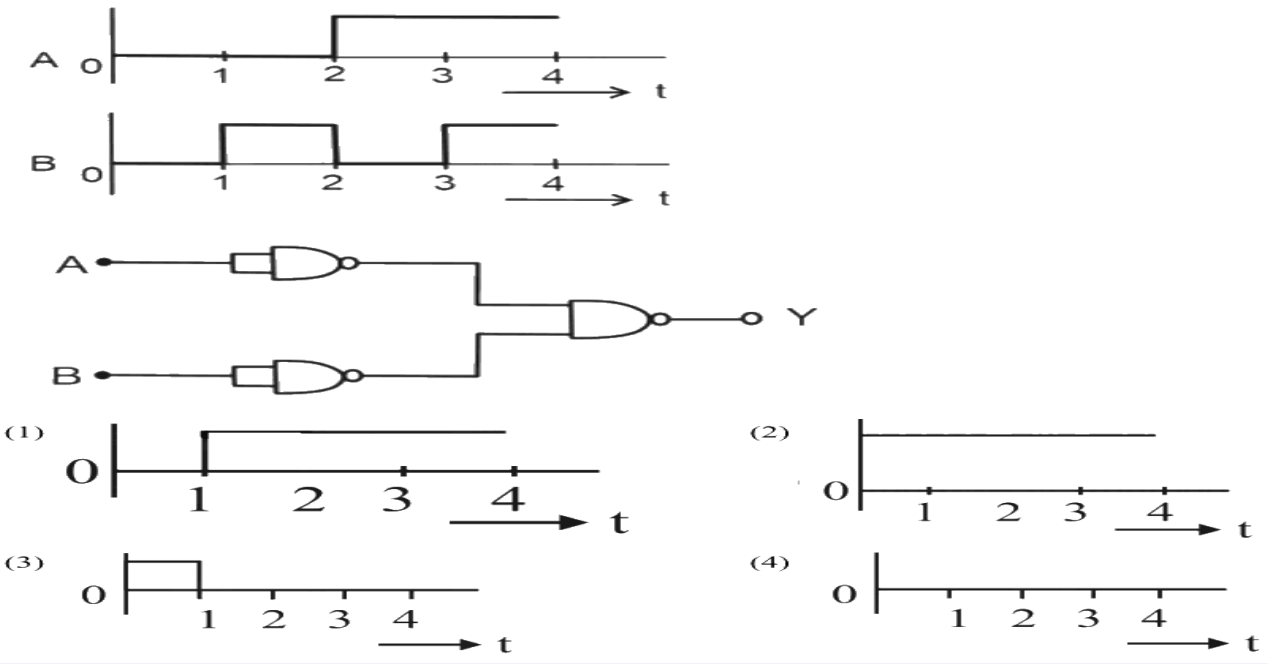

(A) *see figure*
(B) *see figure*
(C) *see figure*
(D) *see figure*

Answer: (A) · Key from source paper

Q71 JEE Main 2023 · 8 Apr · Shift 2 MCQ

For a given transistor amplifier circuit in CE configuration $V_{CC} = 1$ V, $R_C = 1$ kΩ, $R_b = 100$ kΩ and $\beta = 100$. Value of base current I_b is

(see the figure above)

Q29. For a given transistor amplifier circuit in CE configuration $V_{CC} = 1$ V, $R_C = 1$ kΩ, $R_b = 100$ kΩ and $\beta = 100$. Value of base current I_b is

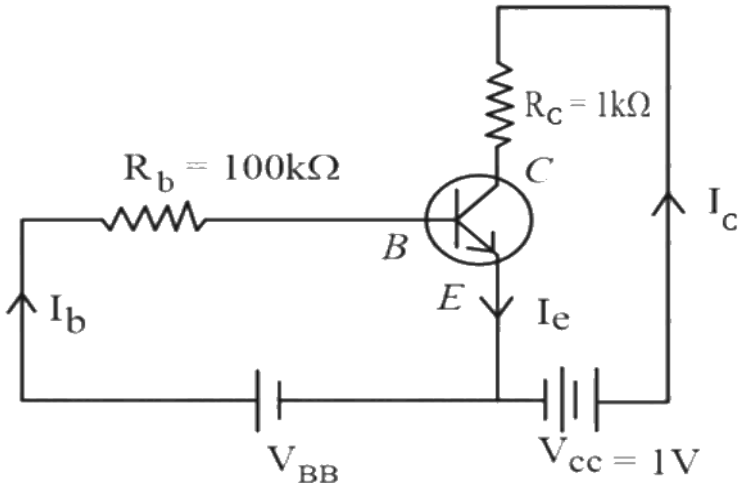

(1) $I_b = 1.0\ \mu$A
(2) $I_b = 0.1\ \mu$A
(3) $I_b = 100\ \mu$A
(4) $I_b = 10\ \mu$A

(A) $I_b = 1.0\ \mu$A
(B) $I_b = 0.1\ \mu$A
(C) $I_b = 100\ \mu$A
(D) $I_b = 10\ \mu$A

Answer: (D) $I_b = 10\ \mu$A · Key from source paper

Q72 JEE Main 2023 · 6 Apr · Shift 1 MCQ

Name the logic gate equivalent to the diagram attached

(see the figure above)

Q18. Name the logic gate equivalent to the diagram attached

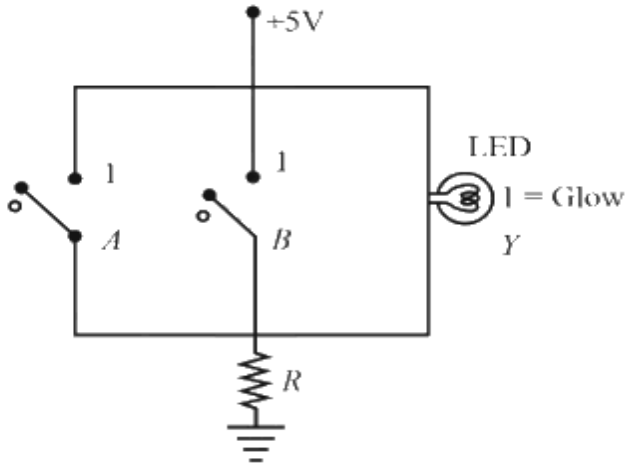

(1) NAND
(2) AND
(3) NOR
(4) OR

(A) NAND
(B) AND
(C) NOR
(D) OR

Answer: (C) NOR · Key from source paper

Q73 JEE Main 2023 · 6 Apr · Shift 1 MCQ

The resistivity (ρ) of semiconductor varies with temperature. Which of the following curve represents the correct behaviour?

(see the figure above)

Q19. The resistivity (ρ) of semiconductor varies with temperature. Which of the following curve represents the correct behaviour?

(1) 

(2) 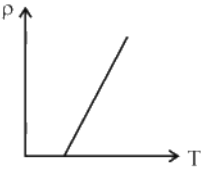

(3) 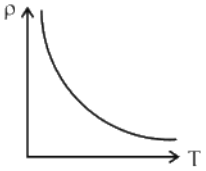

(4) 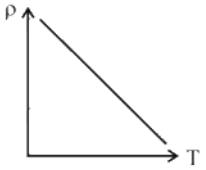

(A) *see figure*
(B) *see figure*
(C) *see figure*
(D) *see figure*

Answer: (C) · Key from source paper

Q74 JEE Main 2023 · 6 Apr · Shift 2 MCQ

Given below are two statements: one is labelled as **Assertion A** and the other is labelled as **Reason R**

Assertion A: Diffusion current in a $p-n$ junction is greater than the drift current in magnitude if the junction is forward biased.

Reason R: Diffusion current in a $p-n$ junction is form the n-side to the p-side if the junction is forward biased.

In the light of the above statements, choose the most appropriate answer from the options given below.

(A) Both A and R are correct but R is NOT the correct explanation of A
(B) A is correct but R is not correct
(C) A is not correct but R is correct
(D) Both A and R is correct and R is the correct explanation of A

Answer: (B) A is correct but R is not correct · Key from source paper

Q75 JEE Main 2023 · 1 Feb · Shift 1 MCQ

Match the List I with List II

List I		List II
A Intrinsic Semiconductor	I	Fermi-level near valence band
B n-type semiconductor	II	Fermi-level at middle of valence and conduction band
C p-type semiconductor	III	Fermi-level near conduction band
D Metals	IV	Fermi-level inside conduction band

Choose the correct answer from the options given below:

(A) (A) $\rightarrow$ I, (B) $\rightarrow$ II, (C) $\rightarrow$ III, (D) $\rightarrow$ IV
(B) (A) $\rightarrow$ II, (B) $\rightarrow$ I, (C) $\rightarrow$ III, (D) $\rightarrow$ IV
(C) (A) $\rightarrow$ II, (B) $\rightarrow$ III, (C) $\rightarrow$ I, (D) $\rightarrow$ IV
(D) (A) $\rightarrow$ III, (B) $\rightarrow$ I, (C) $\rightarrow$ II, (D) $\rightarrow$ IV

Answer: (C) (A) $\rightarrow$ II, (B) $\rightarrow$ III, (C) $\rightarrow$ I, (D) $\rightarrow$ IV · Key from source paper

Q76 JEE Main 2023 · 1 Feb · Shift 2 MCQ

Choose the correct statement about Zener diode:

(A) It works as a voltage regulator in reverse bias and behaves like simple p-n junction diode in forward bias
(B) It works as a voltage regulator in both forward and reverse bias
(C) It works a voltage regulator only in forward bias
(D) It works as a voltage regulator in forward bias and behaves like simple p-n junction diode in reverse bias

Answer: (A) It works as a voltage regulator in reverse bias and behaves like simple p-n junction diode in forward bias · Key from source paper

---

Q77 JEE Main 2023 · 31 Jan · Shift 1 MCQ

The effect of increase in temperature on the number of electrons in conduction band (n_e) and resistance of a semiconductor will be as:

(A) Both n_e and resistance decrease
(B) Both n_e and resistance increase
(C) n_e increases, resistance decreases
(D) n_e decreases, resistance increases

Answer: (C) n_e increases, resistance decreases · Key from source paper

---

Q78 JEE Main 2023 · 31 Jan · Shift 2 MCQ

Given below are two statements:
Statement I : In a typical transistor, all three regions emitter, base and collector have same doping level.
Statement II : in a transistor, collector is the thickest and base is the thinnest segment.
In the light of the above statements, choose the most appropriate answer from the options given below.

(A) Both Statement I and Statement II are correct
(B) Both Statement I and Statement II are incorrect
(C) Statement I is incorrect but Statement II is correct
(D) Statement I is correct but Statement II is incorrect

Answer: (C) Statement I is incorrect but Statement II is correct · Key from source paper

---

Q79 JEE Main 2023 · 30 Jan · Shift 1 MCQ

The output waveform of the given logical circuit for the following inputs A and B as shown below, is

(see the figure above)

EdLoop JEE

Q19. The output waveform of the given logical circuit for the following inputs A and B as shown below, is

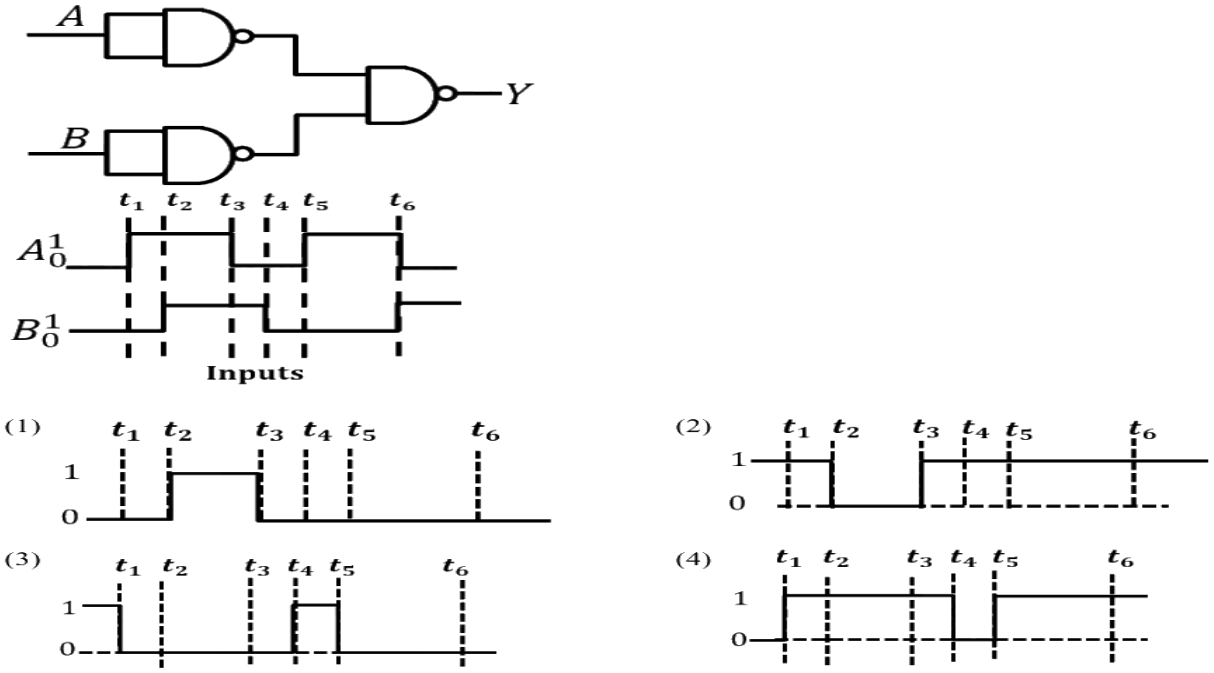

(A) *see figure*

(B) *see figure*

(C) *see figure*

(D) *see figure*

Answer: (D) · Key from source paper

Q80 JEE Main 2023 · 30 Jan · Shift 2 MCQ

The output Y for the inputs A and B of circuit is given by

(see the figure above)

Truth table of the shown circuit is :

Q29. The output Y for the inputs A and B of circuit is given by

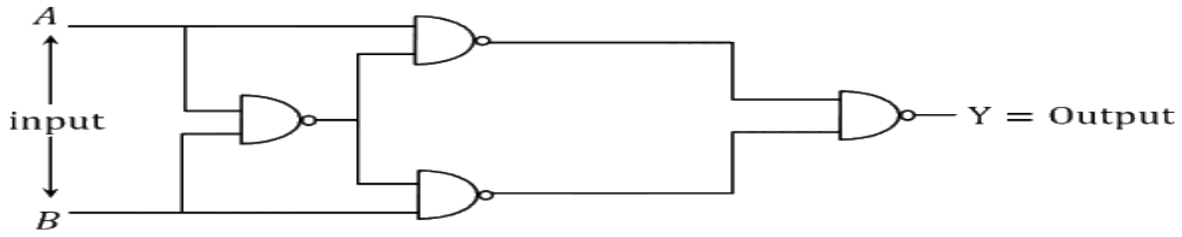

Truth table of the shown circuit is :

(1) $\begin{bmatrix} A & B & Y \\ 0 & 0 & 1 \\ 0 & 1 & 1 \\ 1 & 0 & 1 \\ 1 & 1 & 0 \end{bmatrix}$

(2) $\begin{bmatrix} A & B & Y \\ 0 & 0 & 1 \\ 0 & 1 & 0 \\ 1 & 0 & 0 \\ 1 & 1 & 1 \end{bmatrix}$

(3) $\begin{bmatrix} A & B & Y \\ 0 & 0 & 0 \\ 0 & 1 & 1 \\ 1 & 0 & 1 \\ 1 & 1 & 1 \end{bmatrix}$

(4) $\begin{bmatrix} A & B & Y \\ 0 & 0 & 0 \\ 0 & 1 & 1 \\ 1 & 0 & 1 \\ 1 & 1 & 0 \end{bmatrix}$

(A) $\begin{bmatrix} A & B & Y \\ 0 & 0 & 1 \\ 0 & 1 & 1 \\ 1 & 0 & 1 \\ 1 & 1 & 0 \end{bmatrix}$

(B) $\begin{bmatrix} A & B & Y \\ 0 & 0 & 1 \\ 0 & 1 & 0 \\ 1 & 0 & 0 \\ 1 & 1 & 1 \end{bmatrix}$

(C) $\begin{bmatrix} A & B & Y \\ 0 & 0 & 0 \\ 0 & 1 & 1 \\ 1 & 0 & 1 \\ 1 & 1 & 1 \end{bmatrix}$

(D) $\begin{bmatrix} A & B & Y \\ 0 & 0 & 0 \\ 0 & 1 & 1 \\ 1 & 0 & 1 \\ 1 & 1 & 0 \end{bmatrix}$

Answer: (D) $\begin{bmatrix} A & B & Y \\ 0 & 0 & 0 \\ 0 & 1 & 1 \\ 1 & 0 & 1 \\ 1 & 1 & 0 \end{bmatrix}$ · Key from source paper

Q81 JEE Main 2023 · 29 Jan · Shift 1 MCQ

Which of the following statement is not correct in the case of light emitting diodes?

A. It is a heavily doped p-n junction.

B. It emits light only when it is forward biased.

C. It emits light only when it is reverse biased.
D. The energy of the light emitted is equal to or slightly less than the energy gap of the semiconductor used.

Choose the correct answer from the options given below :

(A) C and D
(B) A
(C) C
(D) B

Answer: (C) C · Key from source paper

Q82 JEE Main 2023 · 29 Jan · Shift 2 MCQ

For the given logic gates combination, the correct truth table will be
(see the figure above)

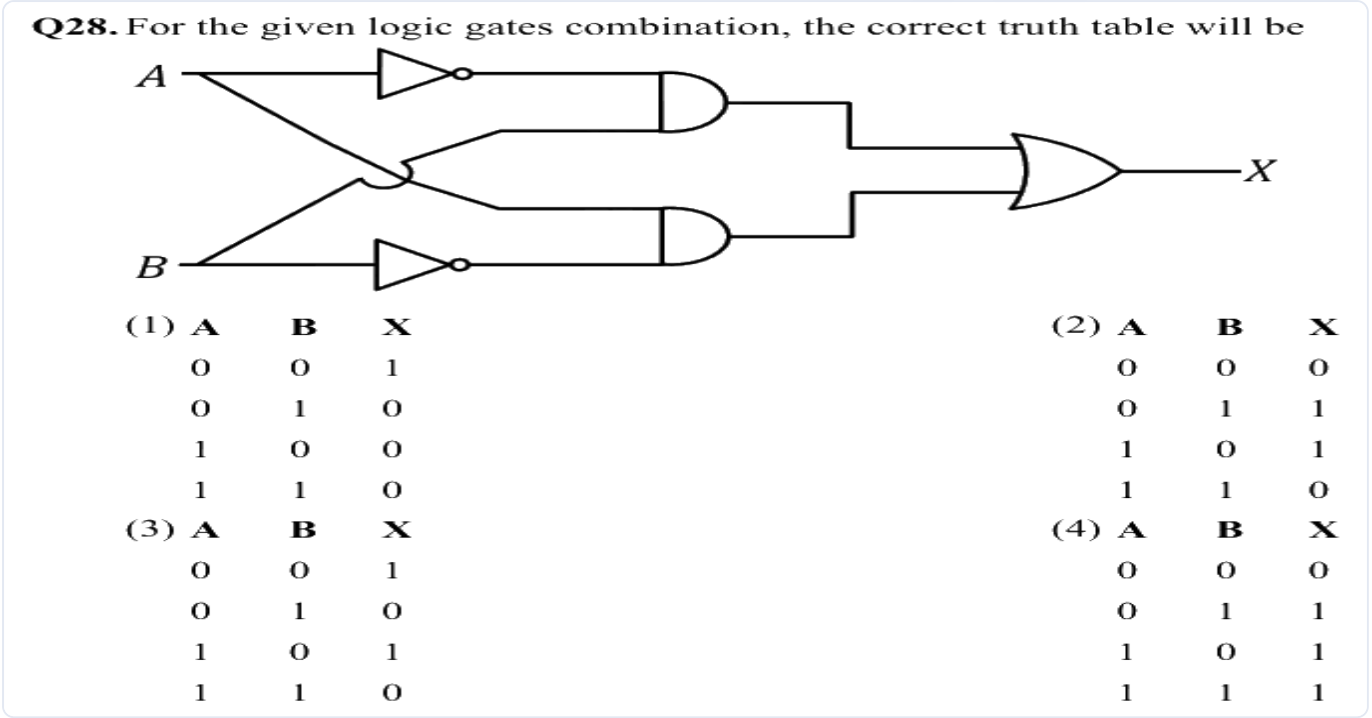

(A) A B X: 0 0 1; 0 1 0; 1 0 0; 1 1 0
(B) A B X: 0 0 0; 0 1 1; 1 0 1; 1 1 0
(C) A B X: 0 0 1; 0 1 0; 1 0 1; 1 1 0
(D) A B X: 0 0 0; 0 1 1; 1 0 1; 1 1 1

Answer: (B) A B X: 0 0 0; 0 1 1; 1 0 1; 1 1 0 · Key from source paper

Q83 JEE Main 2023 · 25 Jan · Shift 1 MCQ

Given below are two statements : one is labelled as Assertion A and the other is labelled as Reason R
Assertion A: Photodiodes are used in forward bias usually for measuring the light intensity.
Reason R: For a $p-n$ junction diode, at applied voltage V the current in the forward bias is more

than the current in the reverse bias for $|V_z| > \pm V \geq |V_0|$ where V_0 is the threshold voltage and V_z is the breakdown voltage.

In the light of the above statements, choose the correct answer from the options given below

(A) Both A and R are true and R is correct explanation A

(B) Both A and R are true but R is NOT the correct explanation A

(C) A is false but R is true

(D) A is true but R is false

Answer: (C) A is false but R is true · Key from source paper

Q84 JEE Main 2023 · 25 Jan · Shift 2 MCQ

Statement I : When a Si sample is doped with Boron, it becomes P type and when doped by Arsenic it becomes N-type semi conductor such that P-type has excess holes and N-type has excess electrons.

Statement II : When such P-type and N-type semi-conductors, are fused to make a junction, a current will automatically flow which can be detected with an externally connected ammeter.

In the light of above statements, choose the most appropriate answer from the options given below.

(A) Both Statement I and statement II are incorrect

(B) Statement I is incorrect but statement II is correct

(C) Both Statement I and statement II are correct

(D) Statement I is correct but statement II is incorrect

Answer: (D) Statement I is correct but statement II is incorrect · Key from source paper

---

Q85 JEE Main 2023 · 24 Jan · Shift 1 MCQ

Given below are two statements: one is labelled as **Assertion A** and the other is labelled as **Reason R.**

Assertion A: Photodiodes are preferably operated in reverse bias condition for light intensity measurement.

Reason R: The current in the forward bias is more than the current in the reverse bias for a p-n junction diode.

In the light of the above statement, choose the correct answer from the options given below :

(A) A is false but R is true

(B) Both A and R are true but R is NOT the correct explanation of A

(C) A is true but R is false

(D) Both A and R are true and R is the correct explanation of A

Answer: (B) Both A and R are true but R is NOT the correct explanation of A · Key from source paper

---

Q86 JEE Main 2023 · 24 Jan · Shift 2 MCQ

The logic gate equivalent to the given circuit diagram is :

(see the figure above)

Q29. The logic gate equivalent to the given circuit diagram is :

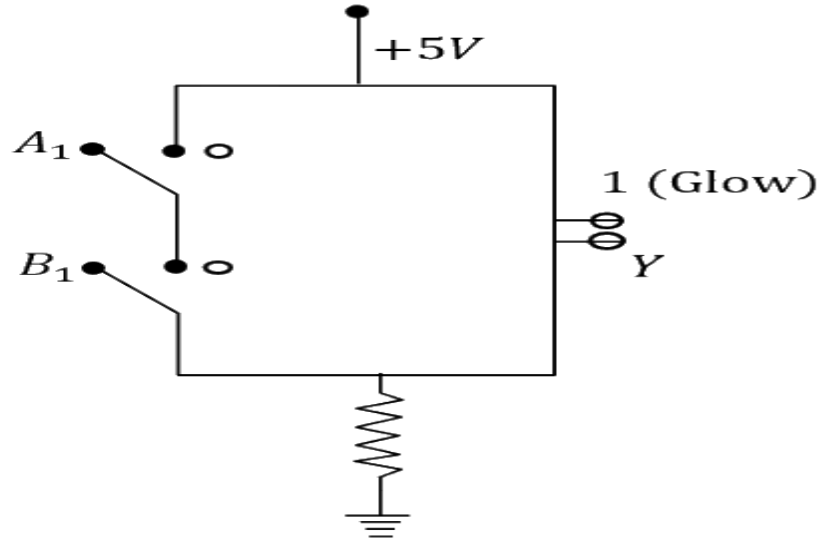

(1) OR
(2) NAND
(3) NOR
(4) AND

(A) OR
(B) NAND
(C) NOR
(D) AND

Answer: (B) NAND · Key from source paper

Q87 JEE Main 2022 · 29 Jul · Shift 1 Numerical

If the potential barrier across a $p-n$ junction is 0.6 V. Then the electric field intensity, in the depletion region having the width of 6×10^{-6} m, will be _____ $\times 10^5$ N C^{-1}

Numerical value type: the answer is a number.

Answer: 1. · Key from source paper

Q88 JEE Main 2022 · 29 Jul · Shift 2 Numerical

A 8V Zener diode along with a series resistance R is connected across a 20 V supply (as shown in the figure). If the maximum Zener current is 25 mA, then the minimum value of R will be _____ Ω.

(see the figure above)

Q29. A 8V Zener diode along with a series resistance R is connected across a 20 V supply (as shown in the figure). If the maximum Zener current is 25 mA, then the minimum value of R will be _____ Ω.

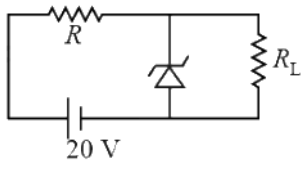

Numerical value type: the answer is a number.

Answer: 480. · Key from source paper

Q89 JEE Main 2022 · 28 Jul · Shift 1 MCQ

Identify the solar cell characteristics from the following options :

(see the figure above)

Q19. Identify the solar cell characteristics from the following options :



(A) *see figure*
(B) *see figure*
(C) *see figure*
(D) *see figure*

Answer: (B) · Key from source paper

Q90 JEE Main 2022 · 28 Jul · Shift 2 MCQ

An n.p.n transistor with current gain $\beta = 100$ in common emitter configuration is shown in figure. The output voltage of the amplifier will be

(see the figure above)

Q19. An n.p.n transistor with current gain $\beta = 100$ in common emitter configuration is shown in figure. The output voltage of the amplifier will be

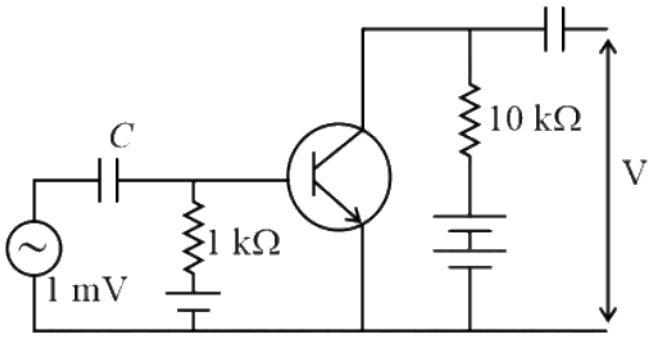

(1) 0.1 V
(2) 1.0 V
(3) 10 V
(4) 100 V

(A) 0.1 V
(B) 1.0 V
(C) 10 V
(D) 100 V

Answer: (B) 1.0 V · Key from source paper

Q91 JEE Main 2022 · 27 Jul · Shift 1 MCQ

A logic gate circuit has two inputs A and B and output Y. The voltage waveforms of A, B and Y are shown below

(see the figure above)

The logic gate circuit is

Q19. A logic gate circuit has two inputs A and B and output Y. The voltage waveforms of A, B and Y are shown below

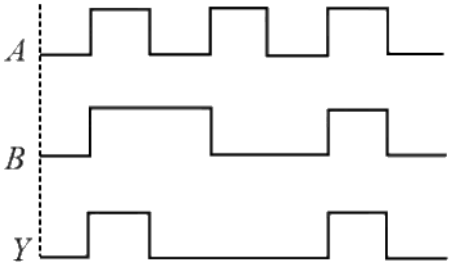

The logic gate circuit is

(1) AND gate
(2) OR gate
(3) NOR gate
(4) NAND gate

(A) AND gate
(B) OR gate
(C) NOR gate
(D) NAND gate

Answer: (A) AND gate · Key from source paper

Q92 JEE Main 2022 · 27 Jul · Shift 2 MCQ

For a constant collector-emitter voltage of 8 V, the collector current of a transistor reached to the value of 6 mA from 4 mA, whereas base current changed from 20 μA to 25 μA value. If transistor is in active state, small signal current gain (current amplification factor) will be

(A) 240
(B) 400
(C) 0.0025
(D) 200

Answer: (B) 400 · Key from source paper

Q93 JEE Main 2022 · 26 Jul · Shift 1 Numerical

In the circuit shown below, maximum Zener diode current will be _____ mA.
(see the figure above)

Q30. In the circuit shown below, maximum Zener diode current will be _____ mA.

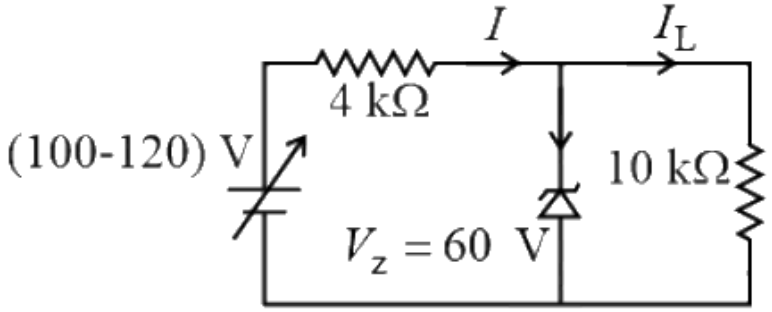

Numerical value type: the answer is a number.

Answer: 9. · Key from source paper

Q94 JEE Main 2022 · 26 Jul · Shift 2 Numerical

The typical transfer characteristic of a transistor in CE configuration is shown in figure. A load resistor of 2 kΩ is connected in the collector branch of the circuit used. The input resistance of the transistor is $0.50\ \text{k}\Omega$. The voltage gain of the transistor is

(see the figure above)

Q30. The typical transfer characteristic of a transistor in CE configuration is shown in figure. A load resistor of 2 kΩ is connected in the collector branch of the circuit used. The input resistance of the transistor is 0.50 kΩ. The voltage gain of the transistor is

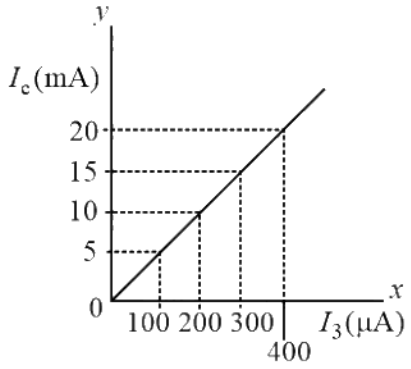

Numerical value type: the answer is a number.

Answer: 200. · Key from source paper

Q95 JEE Main 2022 · 25 Jul · Shift 1 MCQ

In the circuit, the logical value of $A = 1$ or $B = 1$ when potential at A or B is 5 V and the logical value of $A = 0$ or $B = 0$ when potential at A or B is 0V.

(see the figure above)

The truth table of the given circuit will be :

Q20. In the circuit, the logical value of $A = 1$ or $B = 1$ when potential at A or B is 5 V and the logical value of $A = 0$ or $B = 0$ when potential at A or B is 0V.

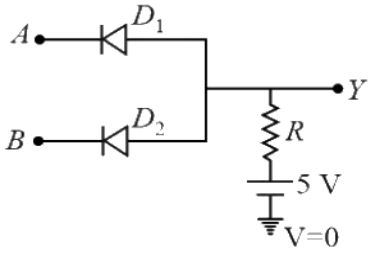

The truth table of the given circuit will be :

(1)

A	B	Y
0	0	0
1	0	0
0	1	0
1	1	1

(2)

A	B	Y
0	0	0
1	0	1
0	1	1
1	1	1

(3)

A	B	Y
0	0	0
1	0	0
0	1	0
1	1	0

(4)

A	B	Y
0	0	1
1	0	1
0	1	1
1	1	0

(A) A B Y; 0 0 0; 1 0 0; 0 1 0; 1 1 1
(B) A B Y; 0 0 0; 1 0 1; 0 1 1; 1 1 1
(C) A B Y; 0 0 0; 1 0 0; 0 1 0; 1 1 0
(D) A B Y; 0 0 1; 1 0 1; 0 1 1; 1 1 0

Answer: (A) A B Y; 0 0 0; 1 0 0; 0 1 0; 1 1 1 · Key from source paper

Q96 JEE Main 2022 · 25 Jul · Shift 1 Numerical

The energy band gap of semiconducting material to produce violet (wavelength = 4000 Å) LED is _____ eV. (Round off to the nearest integer).

Numerical value type: the answer is a number.

Answer: 3. · Key from source paper

Q97 JEE Main 2022 · 25 Jul · Shift 2 Numerical

Two ideal diodes are connected in the network as shown in figure. The equivalent resistance between A and B is _____ Ω.

(see the figure above)

Q30. Two ideal diodes are connected in the network as shown in figure. The equivalent resistance between A and B is _____ Ω.

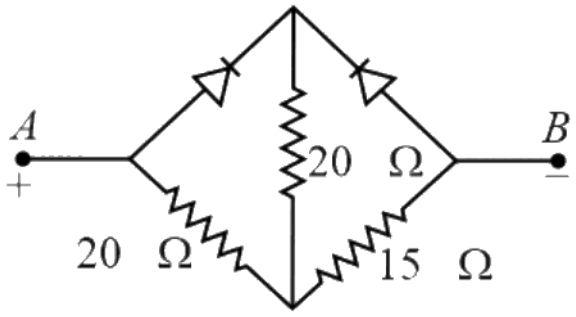

Numerical value type: the answer is a number.

Answer: 25. · Key from source paper

Q98 JEE Main 2022 · 29 Jun · Shift 1 Numerical

A transistor is used in an amplifier circuit in common emitter mode. If the base current changes by $100\ \mu\text{A}$, it brings a change of $10\ \text{mA}$ in collector current. If the load resistance is $2\ \text{k}\Omega$ and input resistance is $1\ \text{k}\Omega$, the value of power gain is $x \times 10^4$. The value of x is _____ .

Numerical value type: the answer is a number.

Answer: 2. · Key from source paper

Q99 JEE Main 2022 · 29 Jun · Shift 2 · Numerical

A potential barrier of $0.4\ \text{V}$ exists across a p-n junction. An electron enters the junction from the n-side with a speed of $6.0 \times 10^5\ \text{m s}^{-1}$. The speed with which electron enters the p side will be $\frac{x}{3} \times 10^5\ \text{m s}^{-1}$, then the value of x is _____.: (Given mass of electron $= 9 \times 10^{-31}\ \text{kg}$, charge on electron $= 1.6 \times 10^{-19}\ \text{C}$.)

Numerical value type: the answer is a number.

Answer: 14. · Key from source paper

Q100 JEE Main 2022 · 28 Jun · Shift 1 · MCQ

In the following circuit, the correct relation between output (Y) and inputs A and B will be

(see the figure above)

Q17. In the following circuit, the correct relation between output (Y) and inputs A and B will be

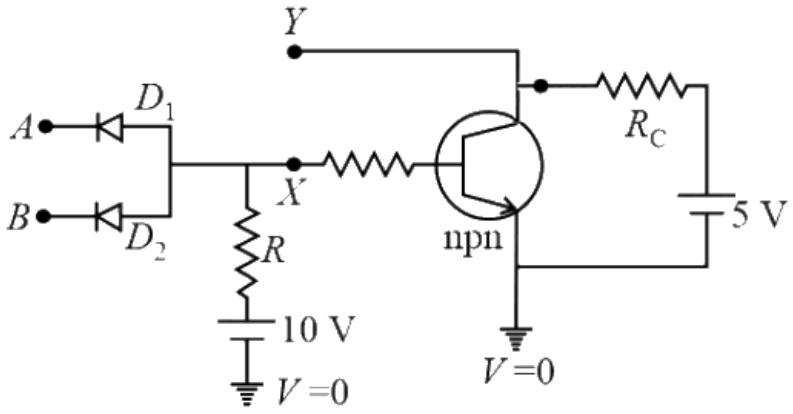

(1) $Y = A \cdot B$
(2) $Y = A + B$
(3) $Y = \overline{A \cdot B}$
(4) $Y = \overline{A + B}$

(A) $Y = A \cdot B$
(B) $Y = A + B$
(C) $Y = \overline{A \cdot B}$
(D) $Y = \overline{A + B}$

Answer: (C) $Y = \overline{A \cdot B}$ · Key from source paper

Q101 JEE Main 2022 · 28 Jun · Shift 1 · MCQ

For using a multimeter to identify diode from electrical components, choose the correct statement out of the following about the diode

(A) It is two terminal device which conducts current in both directions.
(B) It is two terminal device which conducts current in one direction only
(C) It does not conduct current gives an initial deflection which decays to zero.
(D) It is three terminal device which conducts current in one direction only between central terminal and either of the remaining two terminals

Answer: (B) It is two terminal device which conducts current in one direction only · Key from source paper

Q102 JEE Main 2022 · 28 Jun · Shift 1 MCQ

Given below are two statements : One is labelled as Assertion A and the other is labelled as Reason R.
Assertion A : $n-p-n$ transistor permits more current than a $p-n-p$ transistor.
Reason R : Electrons have greater mobility as a charge carrier.

(A) Both A and R true, and R is correct explanation of A.
(B) Both A and R are true but R is NOT the correct explanation of A.
(C) A is true but R is false.
(D) A is false but R is true.

Answer: (A) Both A and R true, and R is correct explanation of A. · Key from source paper

Q103 JEE Main 2022 · 28 Jun · Shift 2 MCQ

In the given circuit the input voltage V_{in} is shown in figure. The cut-in voltage of $p-n$ junction diode (D_1 or D_2) is 0.6 V. Which of the following output voltage (V_0) waveform across the diode is correct? *(see the figure above)*

Q19. In the given circuit the input voltage V_{in} is shown in figure. The cut-in voltage of $p-n$ junction diode (D_1 or D_2) is 0.6 V. Which of the following output voltage (V_0) waveform across the diode is correct?

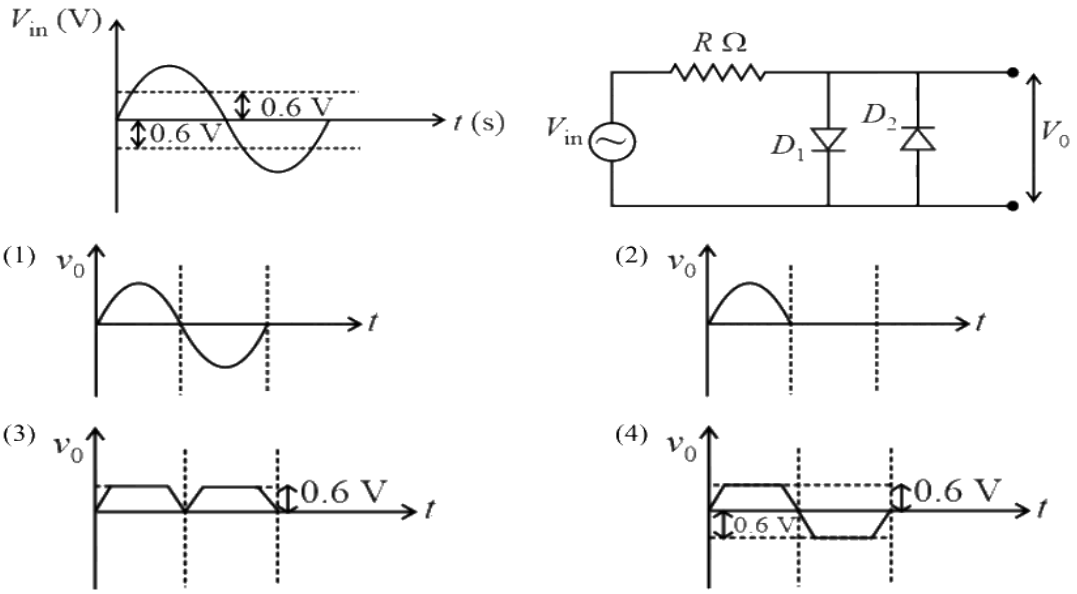

(A) *see figure*

(B) *see figure*

(C) *see figure*

(D) *see figure*

Answer: (D) · Key from source paper

Q104 JEE Main 2022 · 28 Jun · Shift 2 Numerical

A Zener of breakdown voltage $V_Z = 8$ V and maximum Zener current, $I_{ZM} = 10$ mA is subjected to an input voltage $V_i = 10$ V with series resistance $R = 100\ \Omega$. In the given circuit R_L represents the variable load resistance. The ratio of maximum and minimum value of R_L is _____ .

(see the figure above)

Q29. A Zener of breakdown voltage $V_Z = 8$ V and maximum Zener current, $I_{ZM} = 10$ mA is subjected to an input voltage $V_i = 10$ V with series resistance $R = 100\ \Omega$. In the given circuit R_L represents the variable load resistance. The ratio of maximum and minimum value of R_L is _____ .

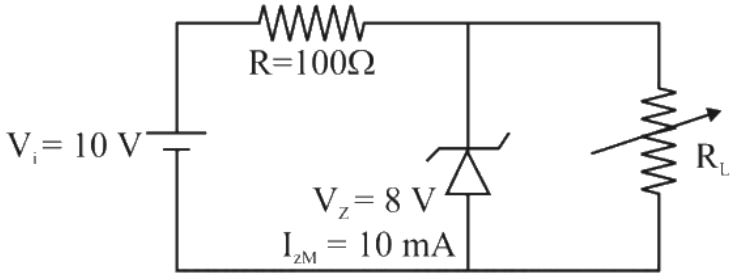

Numerical value type: the answer is a number.

Answer: 2. · Key from source paper

Q105 JEE Main 2022 · 27 Jun · Shift 1 MCQ

Identify the correct Logic Gate for the following output (Y) of two inputs A and B.

(see the figure above)

Q20. Identify the correct Logic Gate for the following output (Y) of two inputs A and B.

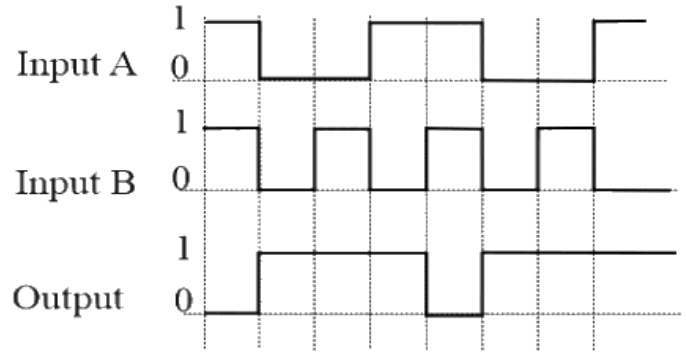

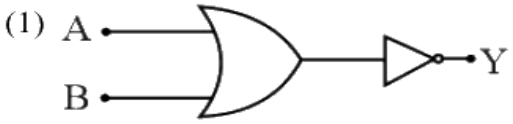

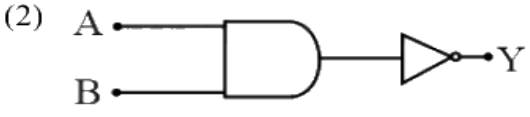

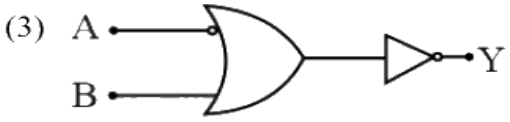

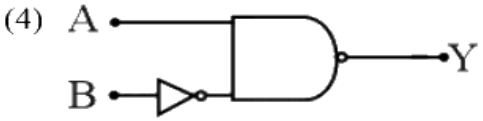

(A) *see figure*
(B) *see figure*
(C) *see figure*
(D) *see figure*

Answer: (B) · Key from source paper

Q106 JEE Main 2022 · 27 Jun · Shift 2 MCQ

For a transistor to act as a switch, it must be operated in

(A) Active region
(B) Saturation and cut-off region
(C) Cutoff region only
(D) Saturated region only

Answer: (B) Saturation and cut-off region · Key from source paper

Q107 JEE Main 2022 · 27 Jun · Shift 2 Numerical

The cut-off voltage of the diodes (shown in figure) in forward bias is $0.6\ \text{V}$. The current through the resister of 40Ω is _____ mA.

(see the figure above)

Q30. The cut-off voltage of the diodes (shown in figure) in forward bias is 0.6 V. The current through the resister of 40Ω is _____ mA.

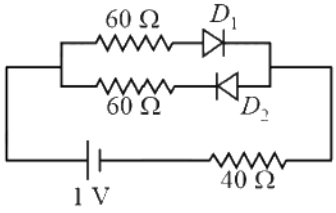

Numerical value type: the answer is a number.

Answer: 4. · Key from source paper

Q108 JEE Main 2022 · 26 Jun · Shift 1 MCQ

The $I - V$ characteristics of a $p - n$ junction diode in forward bias is shown in the figure. The ratio of dynamic resistance, corresponding to forward bias voltage of 2 V and 4 V respective is

(see the figure above)

Q19. The $I - V$ characteristics of a $p - n$ junction diode in forward bias is shown in the figure. The ratio of dynamic resistance, corresponding to forward bias voltage of 2 V and 4 V respective is

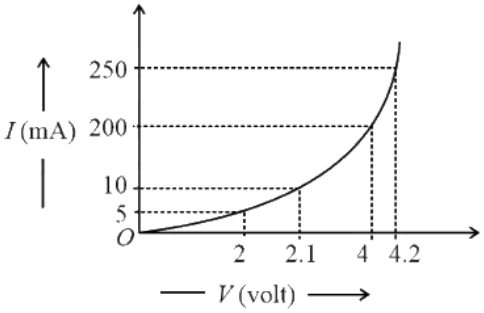

(1) $1 : 2$
(2) $5 : 1$
(3) $1 : 40$
(4) $20 : 1$

(A) $1 : 2$
(B) $5 : 1$
(C) $1 : 40$
(D) $20 : 1$

Answer: (B) $5 : 1$ · Key from source paper

Q109 JEE Main 2022 · 26 Jun · Shift 1 Numerical

As per the given circuit, the value of current through the battery will be _____ A.

(see the figure above)

Q29. As per the given circuit, the value of current through the battery will be _____ A.

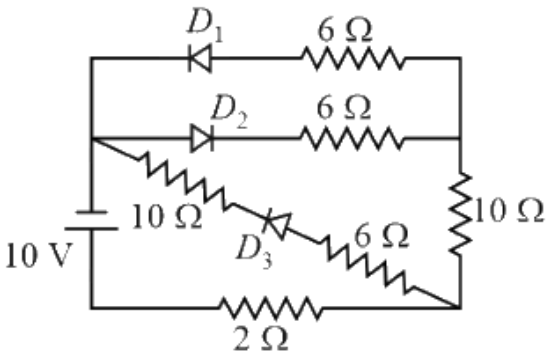

Numerical value type: the answer is a number.

Answer: 1. · Key from source paper

Q110 JEE Main 2022 · 26 Jun · Shift 2 MCQ

The positive feedback is required by an amplifier to act as an oscillator. The feedback here means

(A) External input is necessary to sustain ac signal in output.
(B) A portion of the output power is returned back to the input.
(C) Feedback can be achieved by LR network.
(D) The base-collector junction must be forward biased.

Answer: (B) A portion of the output power is returned back to the input. · Key from source paper

Q111 JEE Main 2022 · 25 Jun · Shift 1 MCQ

The photodiode is used to detect the optical signals. These diodes are preferably operated in reverse biased mode because

(A) fractional change in majority carriers produce higher forward bias current
(B) fractional change in majority carriers produce higher reverse bias current
(C) fractional change in minority carriers produce higher forward bias current
(D) fractional change in minority carriers produce higher reverse bias current

Answer: (D) fractional change in minority carriers produce higher reverse bias current · Key from source paper

Q112 JEE Main 2022 · 25 Jun · Shift 2 MCQ

Identify the logic operation performed by the given circuit
(see the figure above)

Q19. Identify the logic operation performed by the given circuit

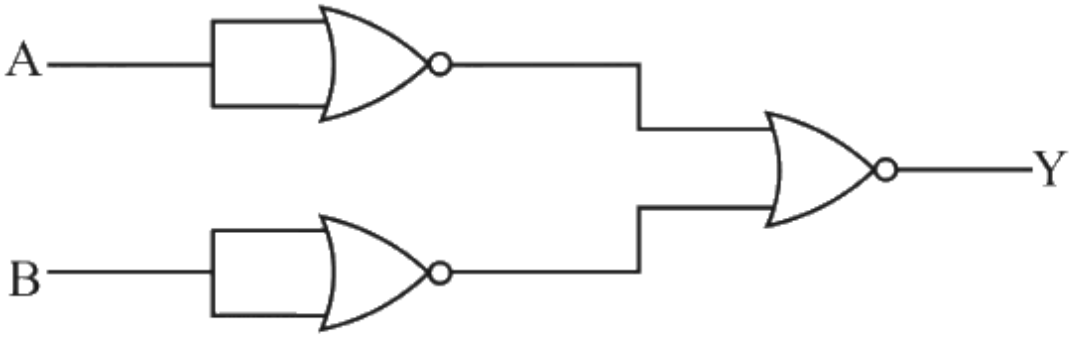

(1) AND gate (2) OR gate
(3) NOR gate (4) NAND gate

(A) AND gate
(B) OR gate
(C) NOR gate
(D) NAND gate

Answer: (A) AND gate · Key from source paper

Q113 JEE Main 2022 · 25 Jun · Shift 2 Numerical

In an experiment of CE configuration of n - p - n transistor, the transfer characteristics are observed as given in figure.

(see the figure above)

If the input resistance is 200Ω and output resistance is 60Ω, the voltage gain in this experiment will be _____ .

Q30. In an experiment of CE configuration of n - p - n transistor, the transfer characteristics are observed as given in figure.

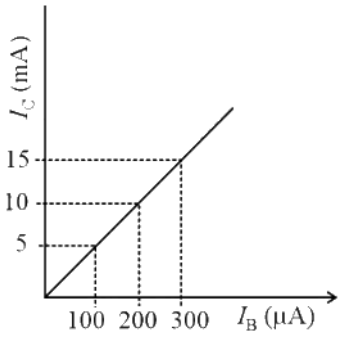

If the input resistance is 200Ω and output resistance is 60Ω, the voltage gain in this experiment will be _____ .

Numerical value type: the answer is a number.

Answer: 15. · Key from source paper

Q114 JEE Main 2022 · 24 Jun · Shift 1 Numerical

A transistor is used in common-emitter mode in an amplifier circuit. When a signal of $10\ \mathrm{mV}$ is added to the base-emitter voltage, the base current changes by $10\mu\mathrm{A}$ and the collector current changes by $1.5\ \mathrm{mA}$. The load resistance is $5\mathrm{k}\Omega$. The voltage gain of the transistor will be _____ .

Numerical value type: the answer is a number.

Answer: 750. · Key from source paper

Q115 JEE Main 2022 · 24 Jun · Shift 2 Numerical

In the given circuit, the value of current I_L will be _____ mA. (When $R_L = 1\ \mathrm{k}\Omega$)
(see the figure above)

Q29. In the given circuit, the value of current I_L will be _____ mA. (When $R_L = 1\ \mathrm{k}\Omega$)

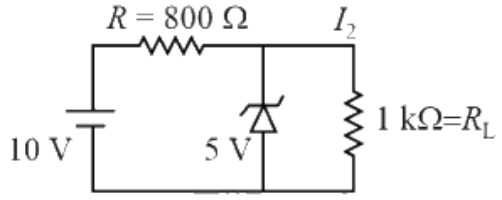

Numerical value type: the answer is a number.

Answer: 5. · Key from source paper

Q116 JEE Main 2021 · 1 Sep · Shift 2 MCQ

In the given figure, each diode has a forward bias resistance of $30\ \Omega$ and infinite resistance in reverse bias. The current I_1 will be :
(see the figure above)

Q20. In the given figure, each diode has a forward bias resistance of 30 Ω and infinite resistance in reverse bias. The current I_1 will be :

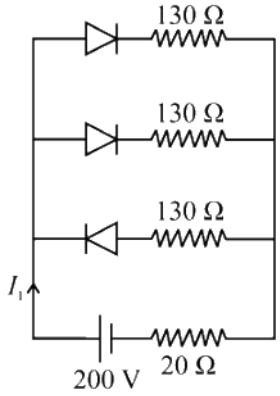

(1) 2.0 A
(2) 3.75 A
(3) 2.73 A
(4) 2.35 A

(A) 2.0 A

(B) 3.75 A

(C) 2.73 A

(D) 2.35 A

Answer: (A) 2.0 A · Key from source paper

Q117 JEE Main 2021 · 31 Aug · Shift 1 MCQ

Choose the correct waveform that can represent the voltage across R of the following circuit, assuming the diode is ideal one:

(see the figure above)

Q19. Choose the correct waveform that can represent the voltage across R of the following circuit, assuming the diode is ideal one:

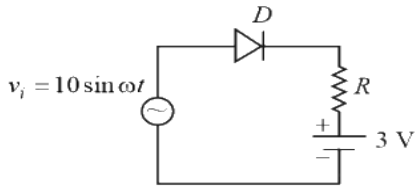

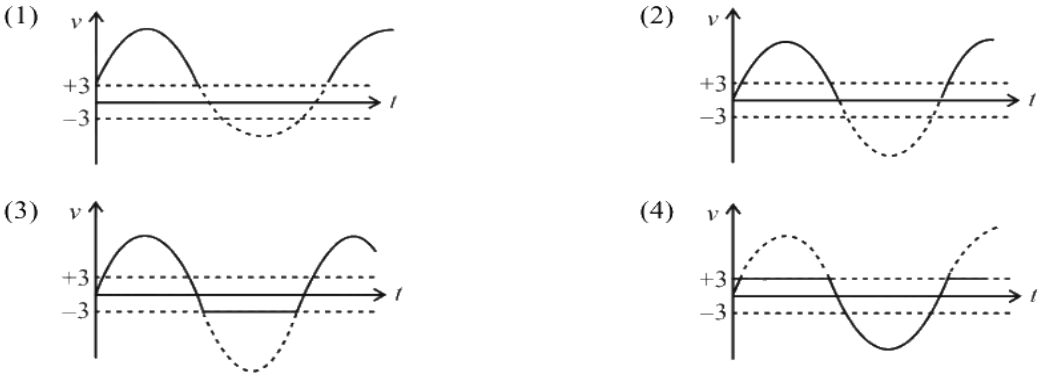

(A) *see figure*

(B) *see figure*

(C) *see figure*

(D) *see figure*

Answer: (A) · Key from source paper

Q118 JEE Main 2021 · 31 Aug · Shift 1 MCQ

In the following logic circuit the sequence of the inputs A, B are $(0,0)$, $(0,1)$, $(1,0)$ and $(1,1)$. The output Y for this sequence will be :

(see the figure above)

Q20. In the following logic circuit the sequence of the inputs A, B are $(0,0),(0,1),(1,0)$ and $(1,1)$. The output Y for this sequence will be :

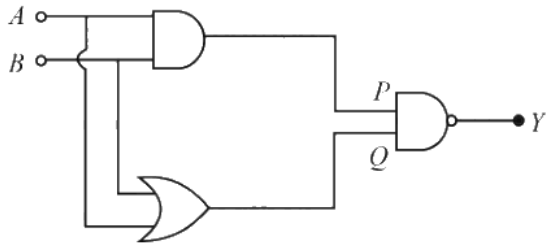

(1) $0,1,0,1$
(2) $0,0,1,1$
(3) $1,1,1,0$
(4) $1,0,1,0$

(A) $0,1,0,1$
(B) $0,0,1,1$
(C) $1,1,1,0$
(D) $1,0,1,0$

Answer: (C) $1,1,1,0$ · Key from source paper

Q119 JEE Main 2021 · 31 Aug · Shift 2 MCQ

If V_A and V_B are the input voltages (either 5 V or 0 V) and V_0 is the output voltage then the two gates represented in the following circuits A and B are :
(see the figure above)

Q19. If V_A and V_B are the input voltages (either 5 V or 0 V) and V_0 is the output voltage then the two gates represented in the following circuits A and B are :

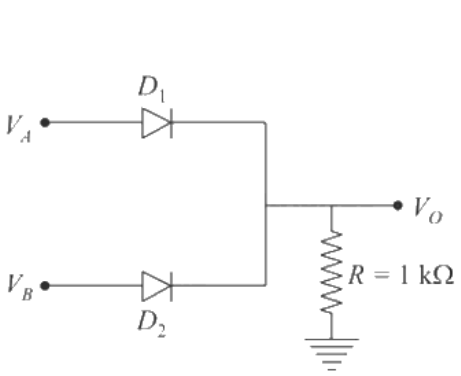

(A)

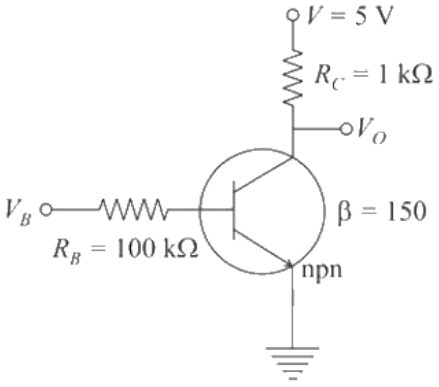

(B)

(1) OR and NOT Gate
(2) AND and NOT Gate
(3) AND and OR Gate
(4) NAND and NOR Gate

(A) OR and NOT Gate
(B) AND and NOT Gate
(C) AND and OR Gate
(D) NAND and NOR Gate

Answer: (A) OR and NOT Gate · Key from source paper

Q120 JEE Main 2021 · 31 Aug · Shift 2 MCQ

Statement I : To get a steady DC output from the pulsating voltage received from a full wave rectifier we can connect a capacitor across the output parallel to the load R_L.
Statement II : To get a steady DC output from the pulsating voltage received from a full wave rectifier we can connect an inductor in series with R_L.
In the light of the above statements, choose the most appropriate answer from the options given below :

(A) Both Statement I and Statement II are false
(B) Both Statement I and Statement II are true
(C) Statement I is false but Statement II is true
(D) Statement I is true but Statement II is false

Answer: (B) Both Statement I and Statement II are true · Key from source paper

---

Q121 JEE Main 2021 · 27 Aug · Shift 1 MCQ

For a transistor in CE mode to be used as an amplifier, it must be operated in:

(A) Cut-off region only
(B) Saturation region only
(C) The active region only
(D) Both cut-off and Saturation

Answer: (C) The active region only · Key from source paper

Q122 JEE Main 2021 · 27 Aug · Shift 1 Numerical

A circuit is arranged as shown in figure. The output voltage V_o is equal to _____ V.
(see the figure above)

EdLoop JEE

Q29. A circuit is arranged as shown in figure. The output voltage V_o is equal to _____ V.

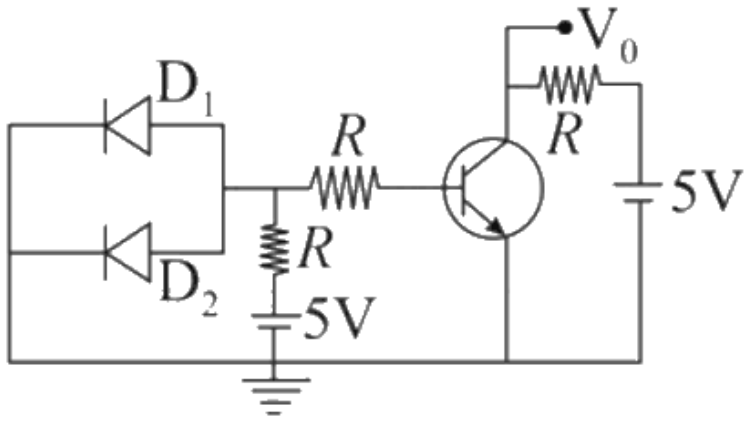

Numerical value type: the answer is a number.

Answer: 5. · Key from source paper

Q123 JEE Main 2021 · 27 Aug · Shift 2 MCQ

For a transistor α and β are given as $\alpha = \frac{I_C}{I_E}$ and $\beta = \frac{I_C}{I_B}$. Then the correct relation between α and β will be:

(A) $\alpha = \frac{1-\beta}{\beta}$

(B) $\alpha\beta = 1$

(C) $\beta = \frac{\alpha}{1-\alpha}$

(D) $\alpha = \frac{\beta}{1-\beta}$

Answer: (C) $\beta = \frac{\alpha}{1-\alpha}$ · Key from source paper

Q124 JEE Main 2021 · 27 Aug · Shift 2 Numerical

A zener diode of power rating 2 W is to be used as a voltage regulator. If the zener diode has a breakdown of 10 V and it has to regulate voltage fluctuated between 6 V and 14 V, the value of R_s for safe operation should be ____ Ω.

(see the figure above)

Q30. A zener diode of power rating 2 W is to be used as a voltage regulator. If the zener diode has a breakdown of 10 V and it has to regulate voltage fluctuated between 6 V and 14 V, the value of R_s for safe operation should be _____ Ω.

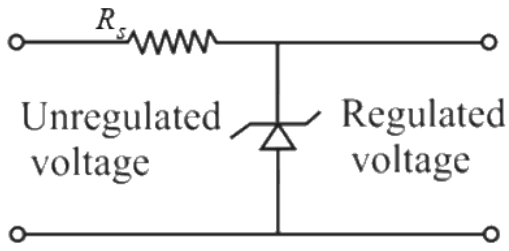

Numerical value type: the answer is a number.

Answer: 20. · Key from source paper

Q125 JEE Main 2021 · 26 Aug · Shift 1 MCQ

Identify the logic operation carried out by the given circuit:
(see the figure above)

Q18. Identify the logic operation carried out by the given circuit:

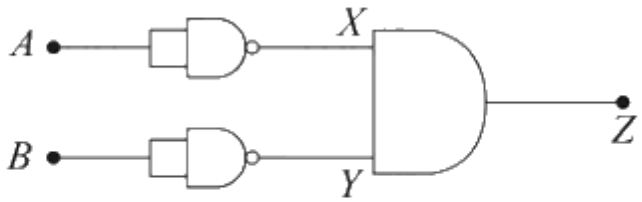

(1) OR (2) AND
(3) NAND (4) NOR

(A) OR
(B) AND
(C) NAND
(D) NOR

Answer: (D) NOR · Key from source paper

Q126 JEE Main 2021 · 26 Aug · Shift 1 MCQ

Statement I: By doping silicon semiconductors with pentavalent material, the electrons density increases.
Statement II: The $n-$type of semiconductor has a net negative charge.
In the above statements, choose the most appropriate answer from the options given below:

(A) Both Statement I and Statement II are false.
(B) Statement I is true but Statement II is false.
(C) Statement I is false but Statement II is true.
(D) Both Statement I and Statement II are true.

Answer: (B) Statement I is true but Statement II is false. · Key from source paper

Q127 JEE Main 2021 · 26 Aug · Shift 2 MCQ

Four NOR gates are connected as shown in figure. The truth table for the given figure is :
(see the figure above)

Q19. Four NOR gates are connected as shown in figure. The truth table for the given figure is :

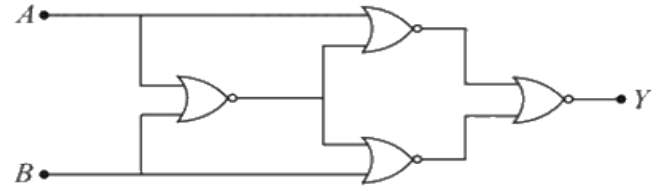

(1)

A	B	Y
0	0	1
0	1	0
1	0	1
1	1	0

(2)

A	B	Y
0	0	0
0	1	1
1	0	1
1	1	0

(3)

A	B	Y
0	0	1
0	1	0
1	0	0
1	1	1

(4)

A	B	Y
0	0	0
0	1	1
1	0	0
1	1	1

(A) *see figure*
(B) *see figure*
(C) *see figure*
(D) *see figure*

Answer: (C) · Key from source paper

Q128 JEE Main 2021 · 26 Aug · Shift 2 Numerical

For the given circuit, the power across zener diode is ____ mW.
(see the figure above)

Q30. For the given circuit, the power across zener diode is _____ mW.

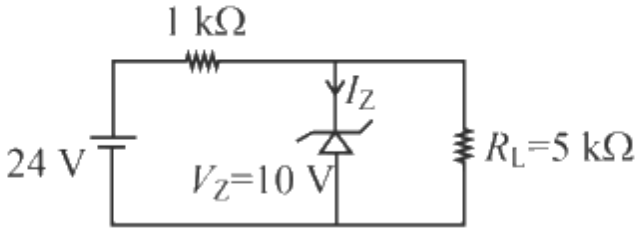

Numerical value type: the answer is a number.

Answer: 120. · Key from source paper

Q129 JEE Main 2021 · 27 Jul · Shift 1 Numerical

A transistor is connected in common emitter circuit configuration, the collector supply voltage is $10\ \mathrm{V}$ and the voltage drop across a resistor of $1000\ \Omega$ in the collector circuit is $0.6\ \mathrm{V}$. If the current gain factor (β) is 24, then the base current is _____ $\mu\mathrm{A}$. (Round off to the Nearest Integer)

Numerical value type: the answer is a number.

Answer: 25. · Key from source paper

Q130 JEE Main 2021 · 27 Jul · Shift 2 MCQ

Find the truth table for the function Y of A and B represented in the following figure.

(see the figure above)

Q20. Find the truth table for the function Y of A and B represented in the following figure.

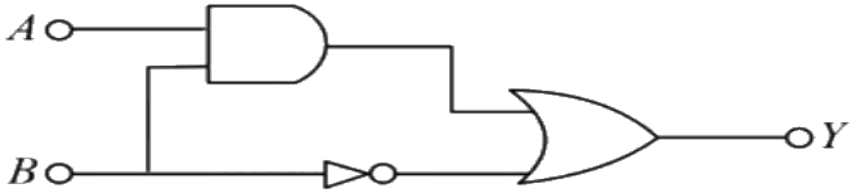

(1)

A	B	Y
0	0	0
0	1	1
1	0	0
1	1	0

(2)

A	B	Y
0	0	1
0	1	0
1	0	1
1	1	1

(3)

A	B	Y
0	0	0
0	1	0
1	0	0
1	1	1

(4)

A	B	Y
0	0	0
0	1	1
1	0	1
1	1	1

(A) *see figure*

(B) *see figure*

(C) *see figure*

(D) *see figure*

Answer: (B) · Key from source paper

Q131 JEE Main 2021 · 25 Jul · Shift 1 MCQ

Identify the logic operation carried out.

(see the figure above)

Q19. Identify the logic operation carried out.

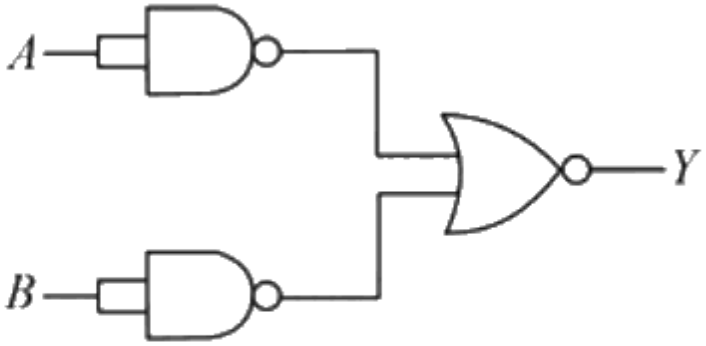

(1) OR
(2) AND
(3) NOR
(4) NAND

(A) OR
(B) AND
(C) NOR
(D) NAND

Answer: (B) AND · Key from source paper

Q132 JEE Main 2021 · 25 Jul · Shift 2 · Numerical

In a semiconductor, the number density of intrinsic charge carriers at $27^{\circ}\mathrm{C}$ is $1.5 \times 10^{16}\ \mathrm{m}^{-3}$. If the semiconductor is doped with an impurity atom, the hole density increases to $4.5 \times 10^{22}\ \mathrm{m}^{-3}$. The electron density in the doped semiconductor is _____ $\times 10^{9}\ \mathrm{m}^{-3}$

Numerical value type: the answer is a number.

Answer: 5. · Key from source paper

Q133 JEE Main 2021 · 22 Jul · Shift 1 · MCQ

Consider a situation in which reverse biased current of a particular $\mathrm{P}-\mathrm{N}$ junction increases when it is exposed to a light of wavelength $\leq 621\ \mathrm{nm}$. During this process, enhancement in carrier concentration takes place due to generation of hole-electron pairs. The value of band gap is nearly.

(A) $2\ \mathrm{eV}$
(B) $4\ \mathrm{eV}$
(C) $1\ \mathrm{eV}$
(D) $0.5\ \mathrm{eV}$

Answer: (A) $2\ \mathrm{eV}$ · Key from source paper

Q134 JEE Main 2021 · 22 Jul · Shift 1 · Numerical

In a given circuit diagram, a $5\ \mathrm{V}$ zener diode along with a series resistance is connected across a $50\ \mathrm{V}$ power supply. The minimum value of the resistance required, if the maximum zener current is $90\ \mathrm{mA}$ will be _____ Ω.

(see the figure above)

Q30. In a given circuit diagram, a 5 V zener diode along with a series resistance is connected across a 50 V power supply. The minimum value of the resistance required, if the maximum zener current is 90 mA will be ____ Ω.

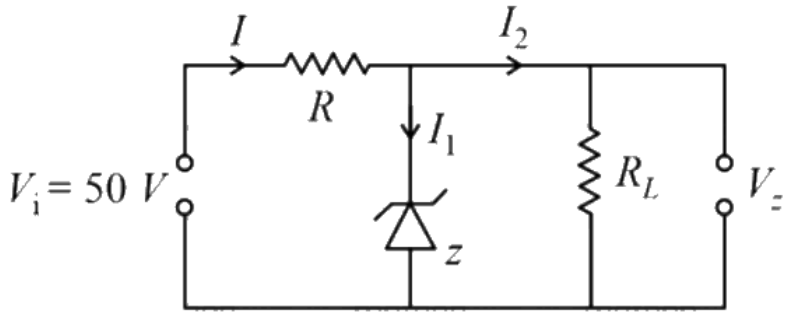

Numerical value type: the answer is a number.

Answer: 500. · Key from source paper

Q135 JEE Main 2021 · 20 Jul · Shift 1 · MCQ

For the circuit shown below, calculate the value of I_z :

(see the figure above)

Q20. For the circuit shown below, calculate the value of I_z :

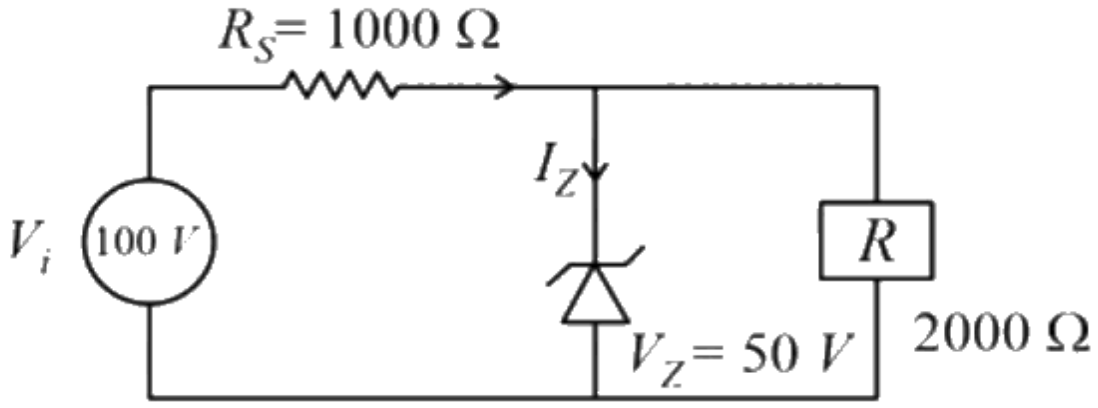

(1) 25 mA
(2) 0.15 A
(3) 0.1 A
(4) 0.05 A

(A) $25\ \text{mA}$
(B) $0.15\ \text{A}$
(C) $0.1\ \text{A}$
(D) $0.05\ \text{A}$

Answer: (A) $25\ \text{mA}$ · Key from source paper

Q136 JEE Main 2021 · 20 Jul · Shift 2 Numerical

A zener diode having zener voltage $8\ V$ and power dissipation rating of $0.5\ W$ is connected across a potential divider arranged with maximum potential drop across zener diode is as shown in the diagram. The value of protective resistance R_p is _____ Ω.
(see the figure above)

Q29. A zener diode having zener voltage $8\ V$ and power dissipation rating of $0.5\ W$ is connected across a potential divider arranged with maximum potential drop across zener diode is as shown in the diagram. The value of protective resistance R_p is _____Ω.

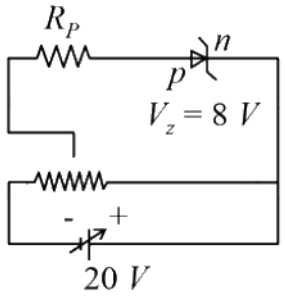

Numerical value type: the answer is a number.

Answer: 192. · Key from source paper

Q137 JEE Main 2021 · 20 Jul · Shift 2 Numerical

For the forward biased diode characteristics shown in the figure, the dynamic resistance at $I_D = 3$ mA will be _____ Ω.
(see the figure above)

Q30. For the forward biased diode characteristics shown in the figure, the dynamic resistance at $I_D = 3$ mA will be _____ Ω.

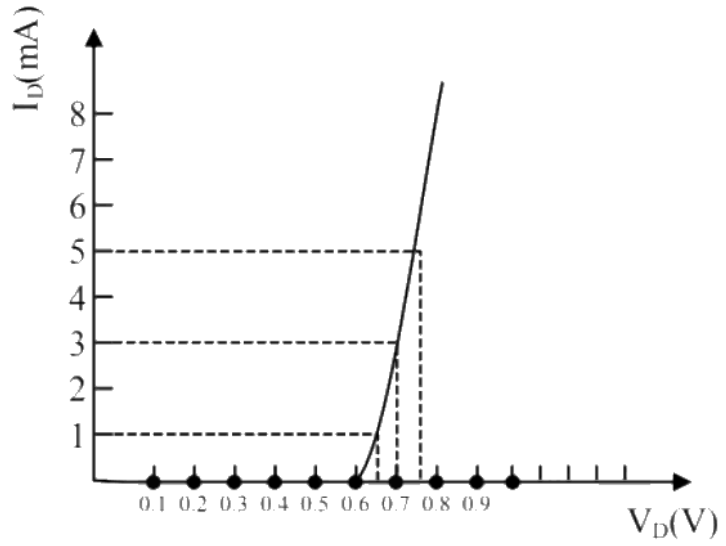

Numerical value type: the answer is a number.

Answer: 25. · Key from source paper

Q138 JEE Main 2021 · 18 Mar · Shift 1 Numerical

An npn transistor operates as a common emitter amplifier with a power gain of 10^6. The input circuit resistance is $100\ \Omega$ and the output load resistance is $10\ \text{k}\Omega$. The common emitter current gain β will be (Round off to the Nearest Integer)

Numerical value type: the answer is a number.

Answer: 100. · Key from source paper

Q139 JEE Main 2021 · 18 Mar · Shift 2 MCQ

The correct relation between α (ratio of collector current to emitter current) and β (ratio of collector current to base current) of a transistor is :

(A) $\beta = \frac{\alpha}{1+\alpha}$
(B) $\alpha = \frac{\beta}{1-\alpha}$
(C) $\beta = \frac{1}{1-\alpha}$
(D) $\alpha = \frac{\beta}{1+\beta}$

Answer: (D) $\alpha = \frac{\beta}{1+\beta}$ · Key from source paper

---

Q140 JEE Main 2021 · 18 Mar · Shift 2 Numerical

The typical output characteristics curve for a transistor working in the common-emitter configuration is shown in the figure.

(see the figure above)

The estimated current gain from the figure is

Q29. The typical output characteristics curve for a transistor working in the common-emitter configuration is shown in the figure.

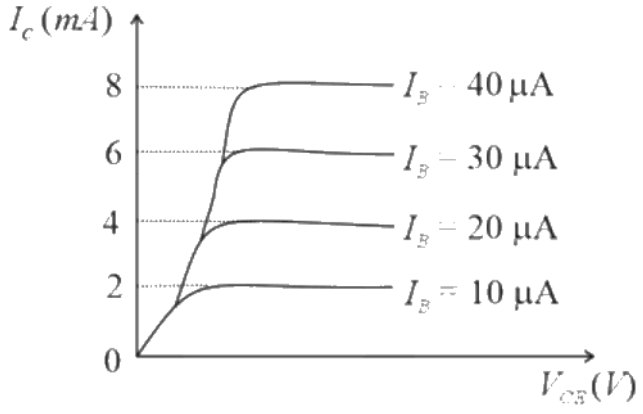

The estimated current gain from the figure is

Numerical value type: the answer is a number.

Answer: 200. · Key from source paper

Q141 JEE Main 2021 · 17 Mar · Shift 1 MCQ

The output of the given combination gates represents:
(see the figure above)

Q19. The output of the given combination gates represents:

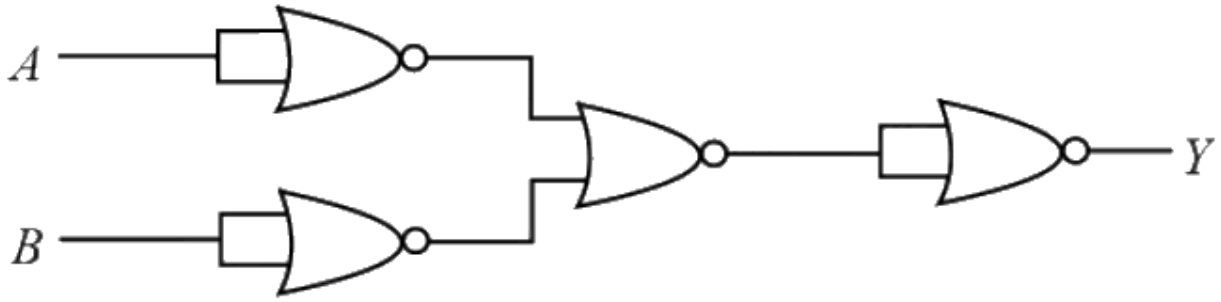

(1) XOR Gate
(2) NAND Gate
(3) AND Gate
(4) NOR Gate

(A) XOR Gate
(B) NAND Gate
(C) AND Gate
(D) NOR Gate

Answer: (B) NAND Gate · Key from source paper

Q142 JEE Main 2021 · 17 Mar · Shift 2 MCQ

Which one of the following will be the output of the given circuit?

(see the figure above)

Q19. Which one of the following will be the output of the given circuit?

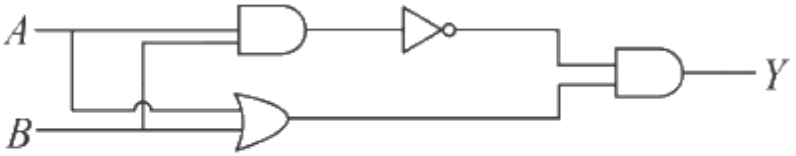

(1) NOR Gate (2) NAND Gate

(3) AND Gate (4) XOR Gate

(A) NOR Gate
(B) NAND Gate
(C) AND Gate
(D) XOR Gate

Answer: (D) XOR Gate · Key from source paper

Q143 JEE Main 2021 · 16 Mar · Shift 1 Numerical

The value of power dissipated across the zener diode ($V_z = 15$ V) connected in the circuit as shown in the figure is $x \times 10^{-1}$ W.

(see the figure above)

The value of x to the nearest integer is _____.

Q29. The value of power dissipated across the zener diode ($V_z = 15$ V) connected in the circuit as shown in the figure is $x \times 10^{-1}$ W.

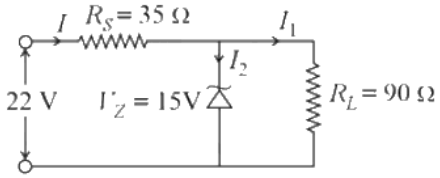

The value of x to the nearest integer is _____.

Numerical value type: the answer is a number.

Answer: 5. · Key from source paper

Q144 JEE Main 2021 · 16 Mar · Shift 1 Numerical

In the logic circuit shown in the figure, if input A and B are 0 to 1 respectively, the output at Y would be x. The value of x is _____.

(see the figure above)

Q30. In the logic circuit shown in the figure, if input A and B are 0 to 1 respectively, the output at Y would be x. The value of x is _____.

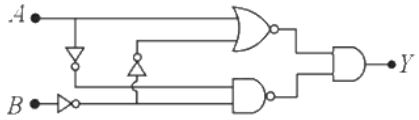

Numerical value type: the answer is a number.

Answer: 0. · Key from source paper

Q145 JEE Main 2021 · 16 Mar · Shift 2 MCQ

The following logic gate is equivalent to :
(see the figure above)

Q19. The following logic gate is equivalent to :

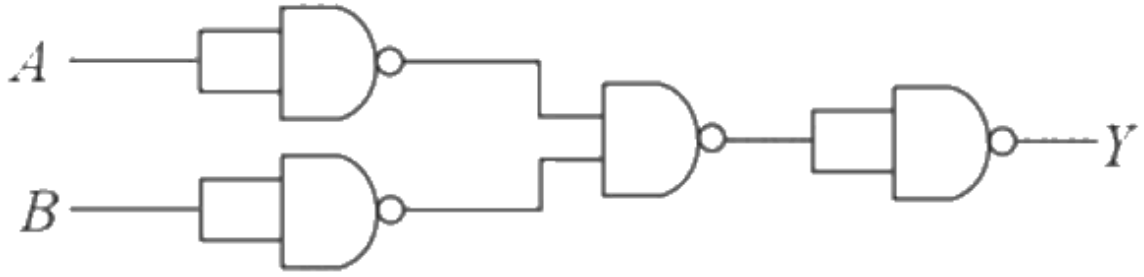

(1) NOR Gate
(2) OR Gate
(3) AND Gate
(4) NAND Gate

(A) NOR Gate
(B) OR Gate
(C) AND Gate
(D) NAND Gate

Answer: (A) NOR Gate · Key from source paper

Q146 JEE Main 2021 · 26 Feb · Shift 1 MCQ

LED is constructed from $Ga - As - P$ semiconducting material. The energy gap of this LED is $1.9\ \text{eV}$. Calculate the wavelength of light emitted and its colour. $h = 6.63 \times 10^{-34}\ \text{J} - \text{s}$ and $c = 3 \times 10^{8}\ \text{m}\,\text{s}^{-1}$

(A) $654\ \text{nm}$ and red colour
(B) $654\ \text{nm}$ and orange colour
(C) $1046\ \text{nm}$ and red colour
(D) $1046\ \text{nm}$ and blue colour

Answer: (A) $654\ \text{nm}$ and red colour · Key from source paper

Q147 JEE Main 2021 · 26 Feb · Shift 1 Numerical

The circuit contains two diodes each with a forward resistance of $50\ \Omega$ and with infinite reverse resistance. If the battery voltage is $6\ \text{V}$, the current through the $120\ \Omega$ resistance is _____ mA
(see the figure above)

Q29. The circuit contains two diodes each with a forward resistance of $50\ \Omega$ and with infinite reverse resistance. If the battery voltage is $6\ \text{V}$, the current through the $120\ \Omega$ resistance is _____ mA

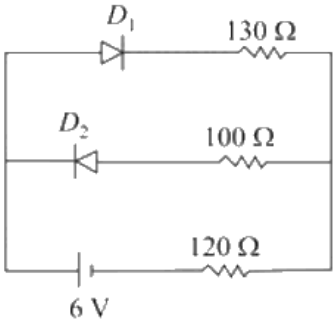

Numerical value type: the answer is a number.

Answer: 20. · Key from source paper

Q148 JEE Main 2021 · 26 Feb · Shift 2 MCQ

Draw the output signal Y in the given combination of gates.
(see the figure above)

Q20. Draw the output signal Y in the given combination of gates.

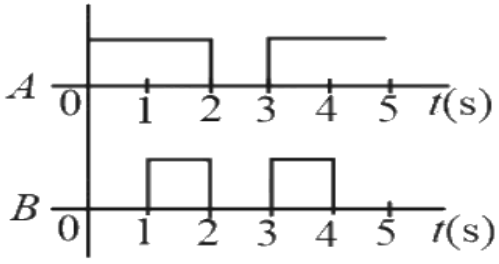

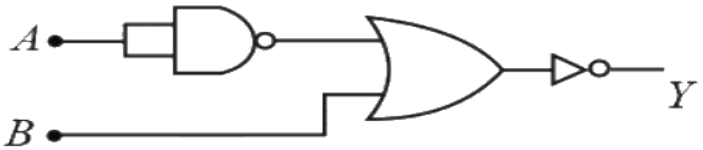

(1)

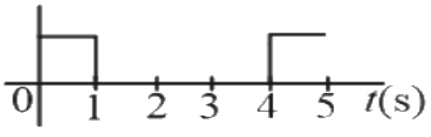

(2)

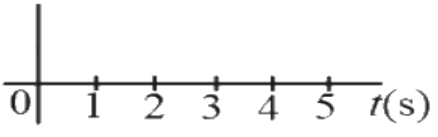

(3)

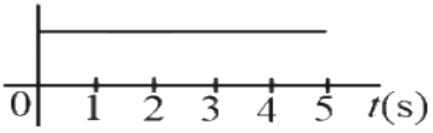

(4)

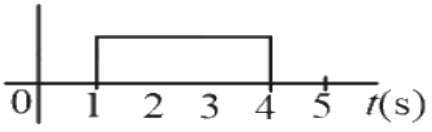

(A) *see figure*
(B) *see figure*
(C) *see figure*
(D) *see figure*

Answer: (A) · Key from source paper

Q149 JEE Main 2021 · 26 Feb · Shift 2 Numerical

The zener diode has a $V_z = 30$ V. The current passing through the diode for the following circuit is _____ mA.

(see the figure above)

Q29. The zener diode has a $V_z = 30$ V. The current passing through the diode for the following circuit is___mA.

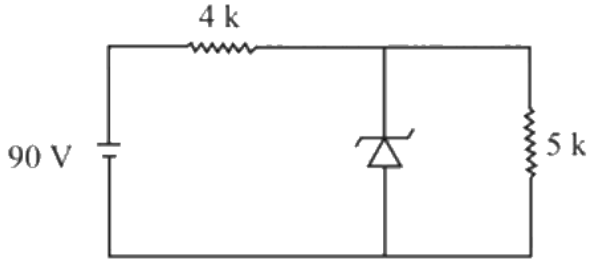

Numerical value type: the answer is a number.

Answer: 9. · Key from source paper

Q150 JEE Main 2021 · 25 Feb · Shift 1 MCQ

A 5 V battery is connected across the points X and Y. Assume D_1 and D_2 to be normal silicon diodes. Find the current supplied by the battery if the $+ve$ terminal of the battery is connected to point X.

(see the figure above)

Q18. A 5 V battery is connected across the points X and Y. Assume D_1 and D_2 to be normal silicon diodes. Find the current supplied by the battery if the $+ve$ terminal of the battery is connected to point X.

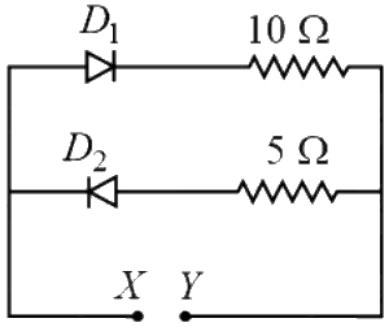

(1) -0.86 A
(2) -0.5 A
(3) -1.5 A
(4) -0.43 A

(A) ~ 0.86 A
(B) ~ 0.5 A
(C) ~ 1.5 A
(D) ~ 0.43 A

Answer: (D) ~ 0.43 A · Key from source paper

Q151 JEE Main 2021 · 25 Feb · Shift 2 MCQ

Match List I with List II.
List I
(a) Rectifier
(b) Stabilizer
(c) Transformer
(d) Filter
List II
(i) Used either for stepping up or stepping down the A.C. voltage
(ii) Used to convert A.C. voltage into D.C. voltage
(iii) Used to remove any ripple in the rectified output voltage
(iv) Used for constant output voltage even when the input voltage or load current change
Choose the correct answer from the options given below:

(A) (a) – (ii), (b) – (iv), (c) – (i), (d) – (iii)
(B) (a) – (ii), (b) – (i), (c) – (iv), (d) – (iii)
(C) (a) – (ii), (b) – (i), (c) – (iii), (d) – (iv)
(D) (a) – (iii), (b) – (iv), (c) – (i), (d) – (ii)

Answer: (A) (a) – (ii), (b) – (iv), (c) – (i), (d) – (iii) · Key from source paper

Q152 JEE Main 2021 · 25 Feb · Shift 2 MCQ

The truth table for the following logic circuit is :
(see the figure above)

EdLoop JEE

Q18. The truth table for the following logic circuit is :

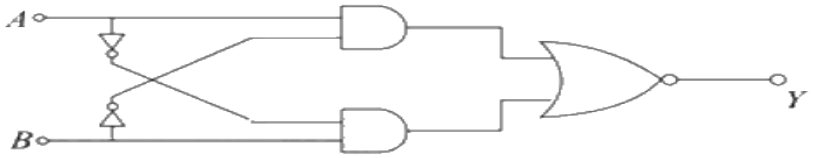

(1)

A	B	Y
0	0	1
0	1	0
1	0	0
1	1	1

(2)

A	B	Y
0	0	1
0	1	0
1	0	1
1	1	0

(3)

A	B	Y
0	0	0
0	1	1
1	0	0
1	1	1

(4)

A	B	Y
0	0	0
0	1	0
1	0	1
1	1	1

(A) *see figure*
(B) *see figure*
(C) *see figure*
(D) *see figure*

Answer: (A) · Key from source paper

Q153 JEE Main 2021 · 25 Feb · Shift 2 MCQ

For extrinsic semiconductors; when doping level is increased;

(A) Fermi-level of p and n- type semiconductors will not be affected.
(B) Fermi-level of p-type semiconductor will go upward and Fermi-level of n-type semiconductors will go downward.
(C) Fermi-level of both p-type and n-type semiconductors will go upward for $T > T_F$ K and downward for $T < T_F$ K, where T_F is Fermi temperature.
(D) Fermi-level of p- type semiconductors will go downward and Fermi-level of n- type semiconductor will go upward.

Answer: (D) Fermi-level of p- type semiconductors will go downward and Fermi-level of n- type semiconductor will go upward. · Key from source paper

Q154 JEE Main 2021 · 24 Feb · Shift 1 MCQ

If an emitter current is changed by $4\ \mathrm{mA}$, the collector current changes by $3.5\ \mathrm{mA}$. The value of β will be:

(A) 3.5

(B) 0.5

(C) 0.875

(D) 7

Answer: (D) 7 · Key from source paper

Q155 JEE Main 2021 · 24 Feb · Shift 1 Numerical

In connection with the circuit drawn below, the value of current flowing through $2\ \text{k}\Omega$ resistor is _____ $\times 10^{-4}$ A.

(see the figure above)

Q29. In connection with the circuit drawn below, the value of current flowing through 2 kΩ resistor is_____ $\times 10^{-4}$ A.

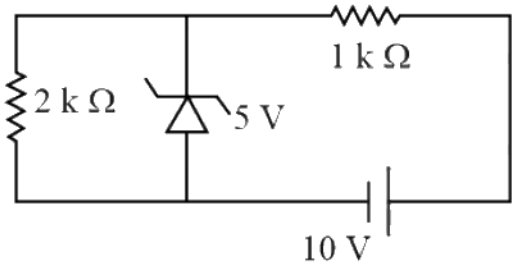

Numerical value type: the answer is a number.

Answer: 25. · Key from source paper

Q156 JEE Main 2021 · 24 Feb · Shift 2 MCQ

see figure

Q18.

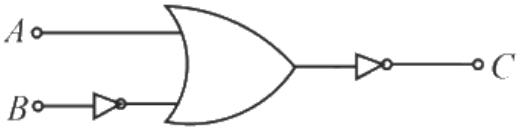

The logic circuit shown above is equivalent to :

(1)

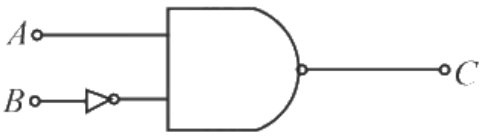

(2)

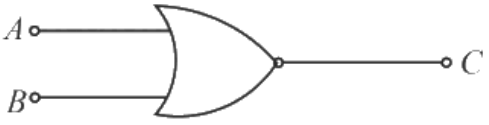

(3)

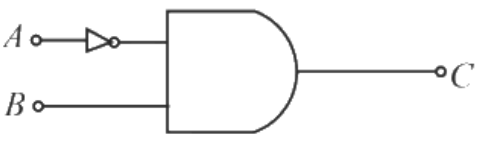

(4)

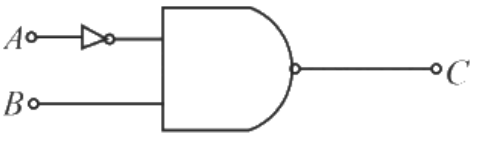

(A) *see figure*
(B) *see figure*
(C) *see figure*
(D) *see figure*

Answer: (C) · Key from source paper

Q157 JEE Main 2021 · 24 Feb · Shift 2 MCQ

Zener breakdown occurs in a $p-n$ junction having $p$and n both:

(A) lightly doped and have narrow depletion layer.
(B) heavily doped and have wide depletion layer.
(C) lightly doped and have wide depletion layer.
(D) heavily doped and have narrow depletion layer.

Answer: (D) heavily doped and have narrow depletion layer. · Key from source paper

---

Q158 JEE Main 2021 · 24 Feb · Shift 2 MCQ

Given below are two statements:
Statement I : $p-n$ junction diodes can be used to function as a transistor, simply by connecting two diodes, back to back, which acts as the base terminal
Statement II: In the study of transistors, the amplification factor β indicates ratio of the collector current to the base current.
In the light of the above statements, choose the correct answer from the options given below.

(A) Both Statement I and Statement II are false
(B) Statement I is true but Statement II is false
(C) Statement I is false but Statement II is true
(D) Both Statement I and Statement II are true

Answer: (C) Statement I is false but Statement II is true · Key from source paper

---

Q159 JEE Main 2020 · 6 Sep · Shift 2 Numerical

The output characteristics of a transistor is shown in the figure. When V_{CE} is 10V and $I_C = 4.0$ mA, then value of β_{ac} is
(see the figure above)

Q25. The output characteristics of a transistor is shown in the figure. When V_{CE} is 10V and $I_C = 4.0$ mA, then value of β_{ac} is

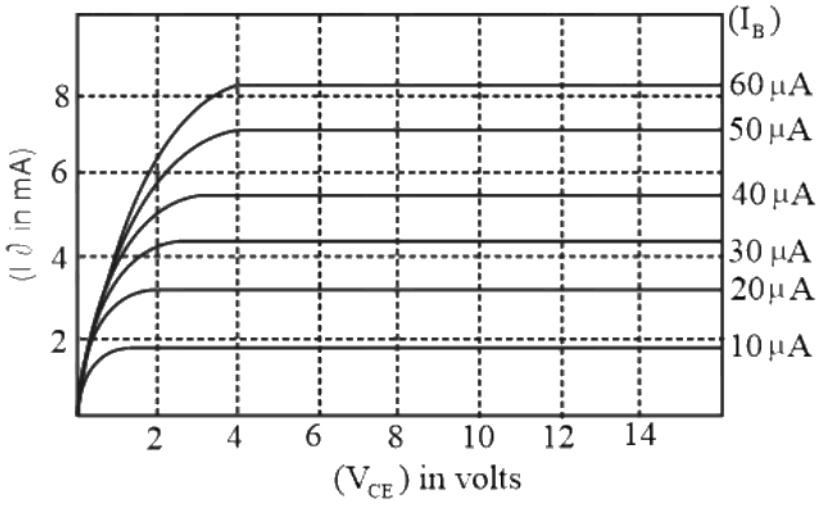

Numerical value type: the answer is a number.

Answer: 150. · Key from source paper

Q160 JEE Main 2020 · 5 Sep · Shift 1 MCQ

With increasing biasing voltage of a photo diode, the photocurrent magnitude:

(A) remains constant
(B) increases initially and after attaining certain value, it decreases
(C) increases linearly
(D) increases initially and saturates finally

Answer: (D) increases initially and saturates finally · Key from source paper

Q161 JEE Main 2020 · 5 Sep · Shift 2 MCQ

Two Zener diodes (A and B) having breakdown voltages of 6 V and 4 V respectively, are connected as shown in the circuit below. The output voltage V_0 variation with input voltage linearly increasing with time, is given by (V_{input} = 0V at t = 0) (figures are qualitative)

(see the figure above)

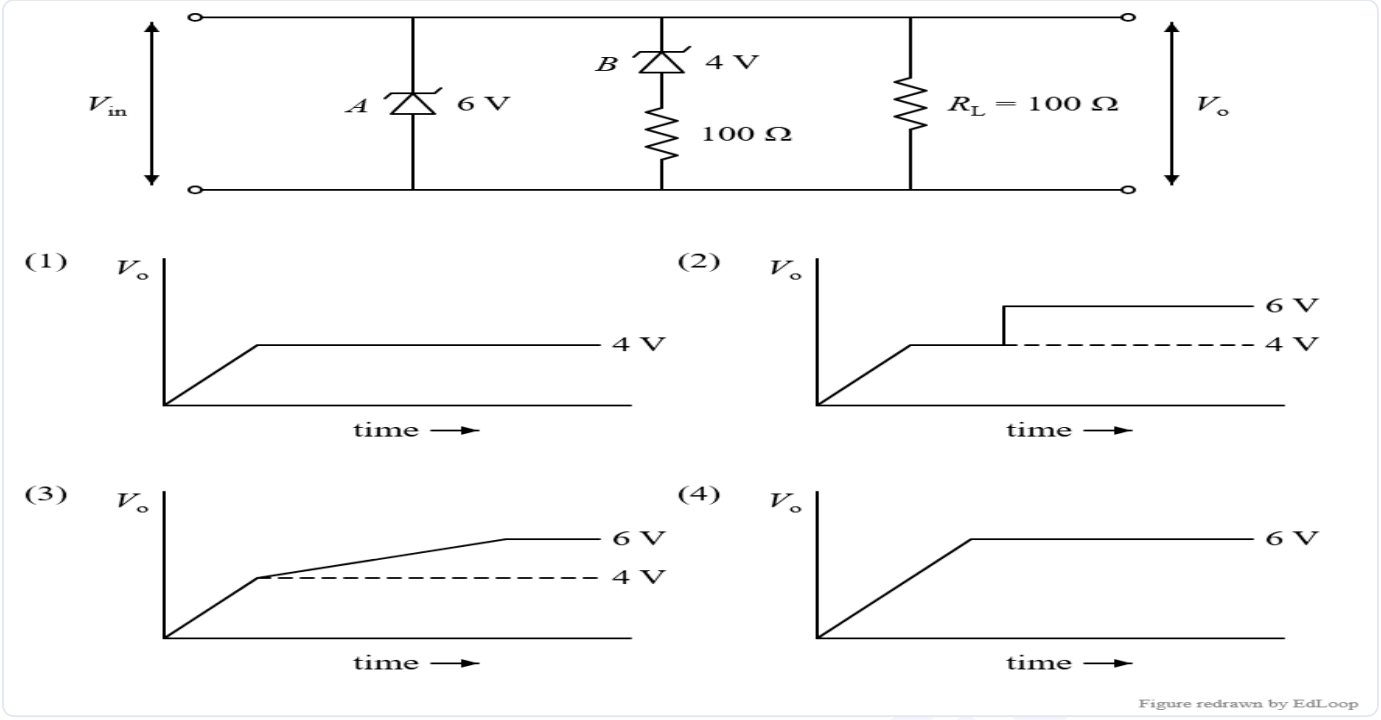

(A) *see figure*

(B) *see figure*

(C) *see figure*

(D) *see figure*

Answer: (C) · Key from source paper

Q162 JEE Main 2020 · 4 Sep · Shift 1 MCQ

Take the breakdown voltage of the zener diode used in the given circuit as 6V. For the input voltage shown in the figure below, the time variation of the output voltage is: (Graphs drawn are schematic and not to the scale)

(see the figure above)

Q20. Take the breakdown voltage of the zener diode used in the given circuit as 6V. For the input voltage shown in the figure below, the time variation of the output voltage is: (Graphs drawn are schematic and not to the scale)

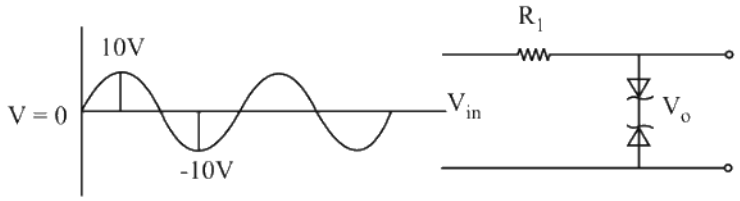

(1) 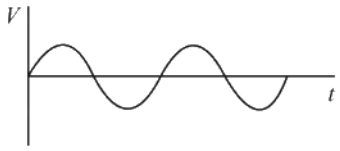

(2) 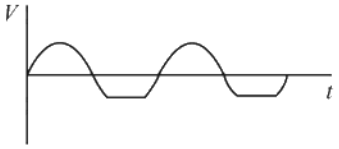

(3) 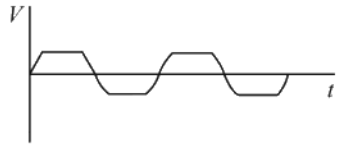

(4) 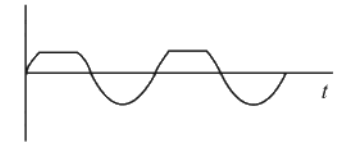

(A) *see figure*
(B) *see figure*
(C) *see figure*
(D) *see figure*

Answer: (C) · Key from source paper

Q163 JEE Main 2020 · 4 Sep · Shift 2 MCQ

Identify the operation performed by the circuit given below :
(see the figure above)

Q20. Identify the operation performed by the circuit given below :

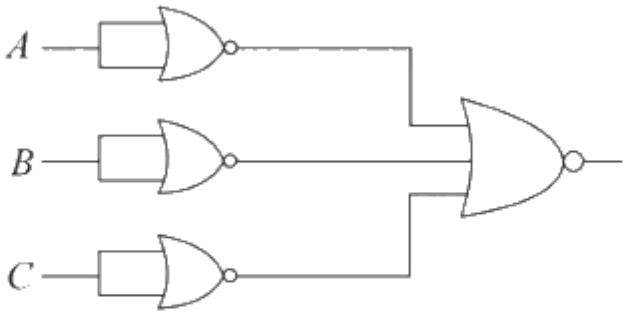

(1) NAND
(2) OR
(3) AND
(4) NOT

(A) NAND
(B) OR
(C) AND
(D) NOT

Answer: (C) AND · Key from source paper

Q164 JEE Main 2020 · 3 Sep · Shift 1 MCQ

When a diode is forward biased, it has a voltage drop of $0.5\ \mathrm{V}$. the safe limit of current through the diode is $10\ \mathrm{mA}$. If a battery of emf $1.5\ \mathrm{V}$ is used in the circuit, the value of minimum resistance to be connected in series with the diode so that the current does not exceed the safe limit is :

(A) $300\ \Omega$
(B) $50\ \Omega$
(C) $100\ \Omega$
(D) $200\ \Omega$

Answer: (C) $100\ \Omega$ · Key from source paper

Q165 JEE Main 2020 · 3 Sep · Shift 2 MCQ

If a semiconductor photo diode can detect a photon with a maximum wavelength of $400\ \mathrm{nm}$, then its band gap energy is: Planck's constant $h = 6.63 \times 10^{-34}\ \mathrm{J.s}$ Speed of light $c = 3 \times 10^{8}\ \mathrm{m\,s^{-1}}$

(A) $1.1\ \mathrm{eV}$
(B) $2.0\ \mathrm{eV}$
(C) $1.5\ \mathrm{eV}$
(D) $3.1\ \mathrm{eV}$

Answer: (D) $3.1\ \mathrm{eV}$ · Key from source paper

Q166 JEE Main 2020 · 2 Sep · Shift 2 MCQ

In the following, digital circuit, what will be the output a 'Z', when the input (A, B) are $(1,0), (0,0), (1,1), (0,1)$
(see the figure above)

Q20. In the following, digital circuit, what will be the output a 'Z', when the input (A, B) are $(1,0),\ (0,0),\ (1,1),\ (0,1)$

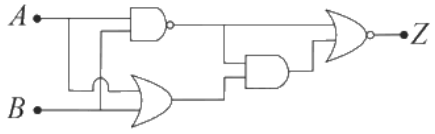

(1) $0, 0, 1, 0$
(2) $1, 0, 1, 1$
(3) $1, 1, 0, 1$
(4) $0, 1, 0, 0$

(A) $0, 0, 1, 0$
(B) $1, 0, 1, 1$
(C) $1, 1, 0, 1$
(D) $0, 1, 0, 0$

Answer: (A) $0, 0, 1, 0$ · Key from source paper

Q167 JEE Main 2020 · 9 Jan · Shift 1 Numerical

Both the diodes used in the circuit shown are assumed to be ideal and have negligible resistance when these are forward biased. Built in potential in each diode is $0.7V$. For the input voltages shown in the figure, the voltage (in Volts) at point A is _____.
(see the figure above)

Q25. Both the diodes used in the circuit shown are assumed to be ideal and have negligible resistance when these are forward biased. Built in potential in each diode is $0.7V$. For the input voltages shown in the figure, the voltage (in Volts) at point A is _____

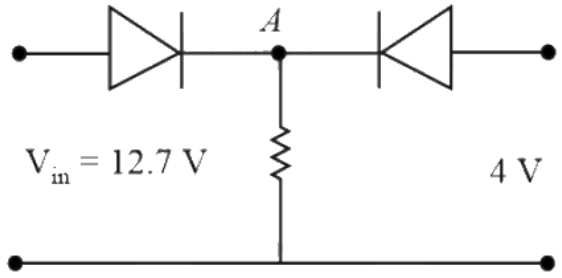

Numerical value type: the answer is a number.

Answer: 12. · Key from source paper

Q168 JEE Main 2020 · 9 Jan · Shift 2 MCQ

The current i in the network is
(see the figure above)

Q20. The current i in the network is

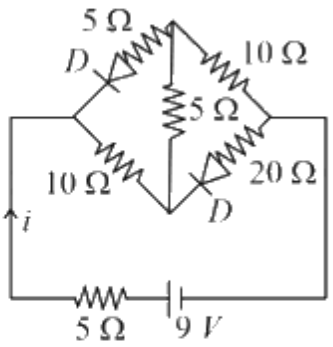

(1) 0.2 A
(2) 0.6 A
(3) 0.3 A
(4) 0 A

(A) 0.2 A
(B) 0.6 A
(C) 0.3 A
(D) 0 A

Answer: (C) 0.3 A · Key from source paper

Q169 JEE Main 2020 · 9 Jan · Shift 2 Numerical

In the circuit shown below, is working as a 8 V dc regulated voltage source. When 12 V is used as an input, the power dissipated (in mW) in each diode is (Considering both zener diodes are identical)
(see the figure above)

Q25. In the circuit shown below, is working as a 8 V dc regulated voltage source. When 12 V is used as an input, the power dissipated (in mW) in each diode is (Considering both zener diodes are identical)

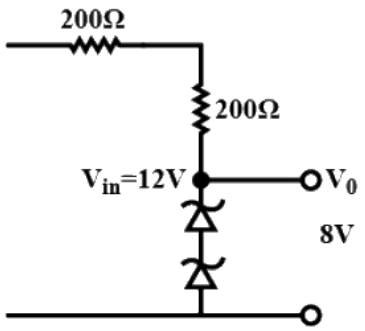

Numerical value type: the answer is a number.

Answer: 40. · Key from source paper

Q170 JEE Main 2020 · 8 Jan · Shift 1 MCQ

Boolean relation at the output stage- Y for the following circuit is:
(see the figure above)

Q20. Boolean relation at the output stage- Y for the following circuit is:

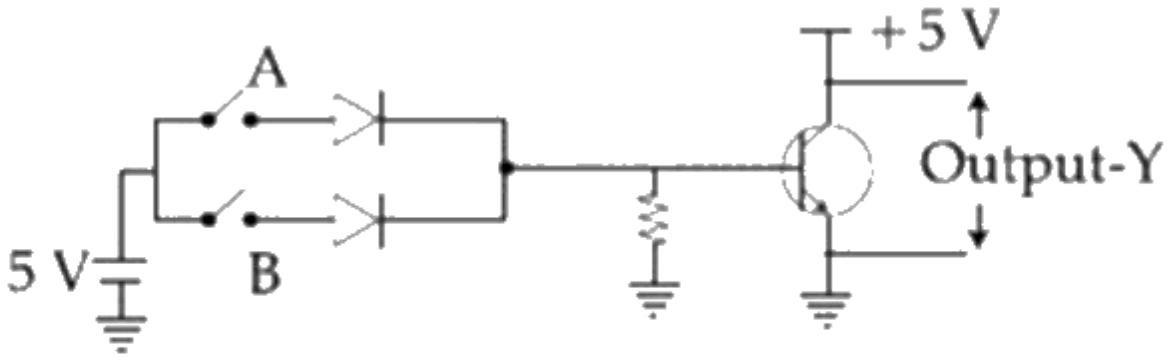

(1) $\overline{A} + \overline{B}$

(2) $A + B$

(3) $A \bullet B$

(4) $\overline{A} \bullet \overline{B}$

(A) $\overline{A} + \overline{B}$
(B) $A + B$
(C) $A \bullet B$
(D) $\overline{A} \bullet \overline{B}$

Answer: (D) $\overline{A} \bullet \overline{B}$ · Key from source paper

Q171 JEE Main 2020 · 8 Jan · Shift 2 MCQ

In the given circuit, value of Y is:
(see the figure above)

Q20. In the given circuit, value of Y is:

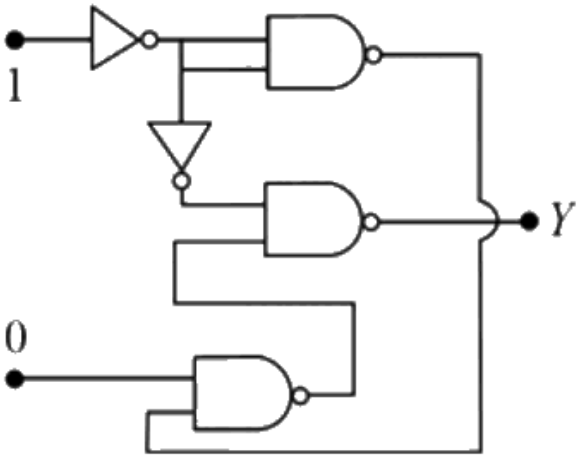

(1) 0

(2) toggles between 0 and 1

(3) will not execute

(4) 1

(A) 0

(B) toggles between 0 and 1

(C) will not execute

(D) 1

Answer: (A) 0 · Key from source paper

Q172 JEE Main 2020 · 7 Jan · Shift 1 MCQ

Which of the following gives a reversible operation?

(see the figure above)

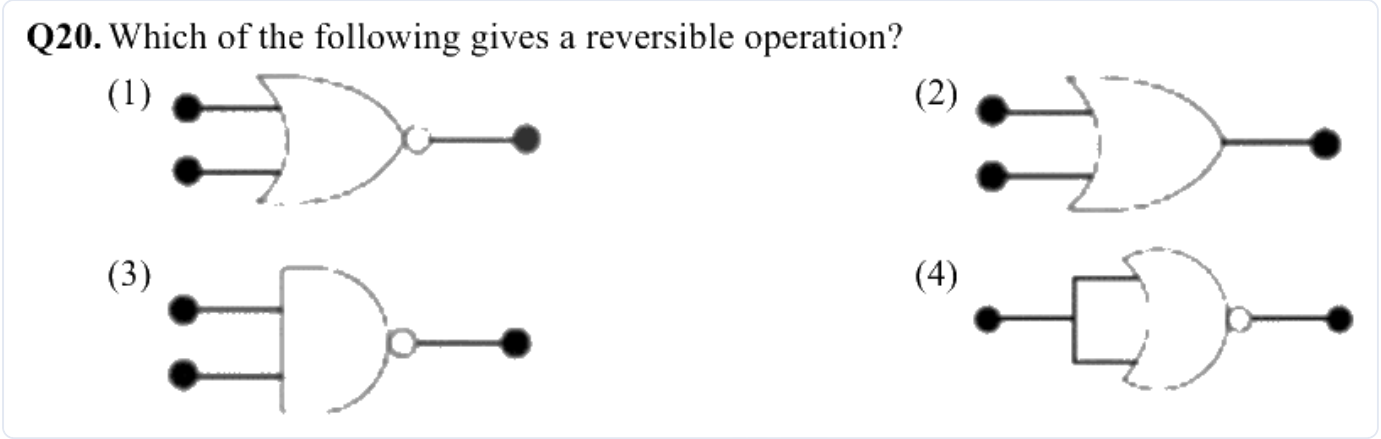

(A) *see figure*

(B) *see figure*

(C) *see figure*

(D) *see figure*

Answer: (D) · Key from source paper

Q173 JEE Main 2020 · 7 Jan · Shift 2 MCQ

In the figure, potential difference between A and B is:

(see the figure above)

Q12. In the figure, potential difference between A and B is:

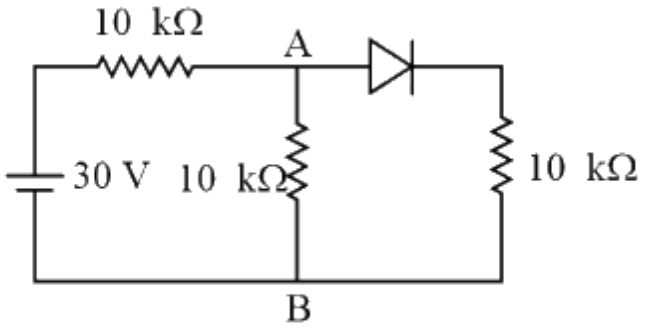

(1) 10 V
(2) 5 V
(3) 15 V
(4) 0 V

(A) 10 V
(B) 5 V
(C) 15 V
(D) 0 V

Answer: (A) 10 V · Key from source paper

Q174 JEE Main 2019 · 12 Apr · Shift 1 MCQ

The truth table for the circuit given in the figure is:
(see the figure above)

Q29. The truth table for the circuit given in the figure is:

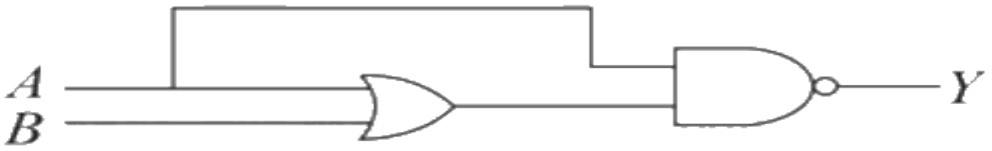

(1)

A	B	Y
0	0	0
0	1	0
1	0	1
1	1	1

(2)

A	B	Y
0	0	1
0	1	0
1	0	0
1	1	0

(3)

A	B	Y
0	0	1
0	1	1
1	0	1
1	1	1

(4)

A	B	Y
0	0	1
0	1	1
1	0	0
1	1	0

(A) *see figure*
(B) *see figure*
(C) *see figure*
(D) *see figure*

Answer: (D) · Key from source paper

Q175 JEE Main 2019 · 12 Apr · Shift 1 MCQ

The transfer characteristic curve of a transistor, having input and output resistance $100\ \Omega$ and $100\ \text{k}\Omega$ respectively, is shown in the figure. The voltage and power gain, are respectively:
(see the figure above)

Q30. The transfer characteristic curve of a transistor, having input and output resistance $100\ \Omega$ and $100\ \text{k}\Omega$ respectively, is shown in the figure. The voltage and power gain, are respectively:

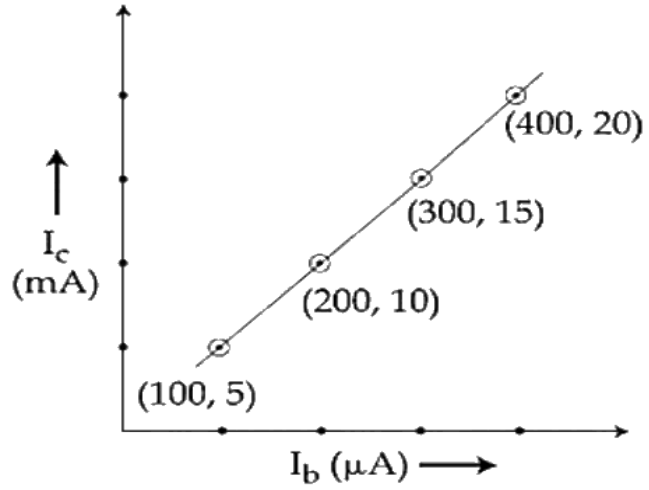

(1) $5 \times 10^4,\ 2.5 \times 10^6$
(2) $2.5 \times 10^4,\ 2.5 \times 10^6$
(3) $5 \times 10^4,\ 5 \times 10^6$
(4) $5 \times 10^4,\ 5 \times 10^5$

(A) $5 \times 10^4,\ 2.5 \times 10^6$
(B) $2.5 \times 10^4,\ 2.5 \times 10^6$
(C) $5 \times 10^4,\ 5 \times 10^6$
(D) $5 \times 10^4,\ 5 \times 10^5$

Answer: (A) $5 \times 10^4,\ 2.5 \times 10^6$ · Key from source paper

Q176 JEE Main 2019 · 12 Apr · Shift 2 MCQ

Figure shows a DC voltage regulator circuit, with a Zener diode of breakdown voltage $= 6\ \text{V}$. If the unregulated input voltage varies between 10 V to 16 V, then what is the maximum Zener current?
(see the figure above)

Q28. Figure shows a DC voltage regulator circuit, with a Zener diode of breakdown voltage $= 6$ V . If the unregulated input voltage varies between 10 V to 16 V, then what is the maximum Zener current?

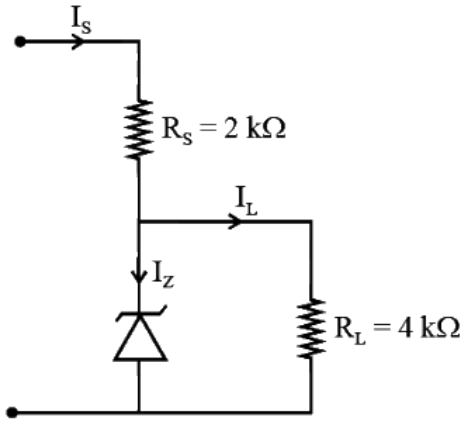

(1) 1.5 mA (2) 3.5 mA
(3) 7.5 mA (4) 2.5 mA

(A) 1.5 mA
(B) 3.5 mA
(C) 7.5 mA
(D) 2.5 mA

Answer: (B) 3.5 mA · Key from source paper

Q177 JEE Main 2019 · 12 Apr · Shift 2 MCQ

In a CE transistor amplifier, the audio signal voltage across the collector resistance of $2\ k\Omega$ is 2 V, if the base resistance is $1\ k\Omega$ and the current amplification of the transistor is 100 then the input signal voltage is

(A) 10 mV
(B) 1 mV
(C) 0 .1 V
(D) 1 V

Answer: (A) 10 mV · Key from source paper

Q178 JEE Main 2019 · 10 Apr · Shift 1 MCQ

An NPN transistor operates as a common emitter amplifier, with a power gain of $60\ dB$. The input circuit resistance is $100\ \Omega$ and the output load resistance is $10\ k\Omega$. The common emitter current gain β is:

(A) 6×10^2
(B) 10^2
(C) 10^4
(D) 60

Answer: (B) 10^2 · Key from source paper

Q179 JEE Main 2019 · 10 Apr · Shift 2 MCQ

The figure represents a voltage regulator circuit using a Zener diode. The breakdown voltage of the Zener diode is 6 V and the load resistance is, $R_L = 4\ \text{k}\Omega$. The series resistance of the circuit is $R_i = 1\ \text{k}\Omega$. If the battery voltage V_B varies from $8\ \text{V}$ to $16\ \text{V}$, what are the minimum and maximum values of the current through Zener diode?

(see the figure above)

Q30. The figure represents a voltage regulator circuit using a Zener diode. The breakdown voltage of the Zener diode is 6 V and the load resistance is, $\text{R}_\text{L} = 4\ \text{k}\Omega$. The series resistance of the circuit is $\text{R}_\text{i} = 1\ \text{k}\Omega$. If the battery voltage V_B varies from $8\ \text{V}$ to $16\ \text{V}$, what are the minimum and maximum values of the current through Zener diode?

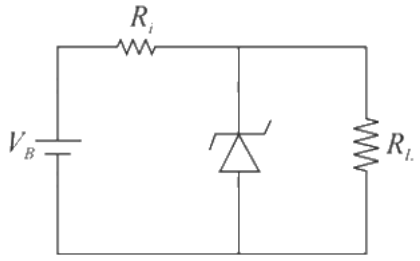

(1) 0.5 mA; 6 mA
(2) 1 mA; 8.5 mA
(3) 0.5 mA; 8.5 mA
(4) 1.5 mA; 8.5 mA

(A) $0.5\ \text{mA};\ 6\ \text{mA}$
(B) $1\ \text{mA};\ 8.5\ \text{mA}$
(C) $0.5\ \text{mA};\ 8.5\ \text{mA}$
(D) $1.5\ \text{mA};\ 8.5\ \text{mA}$

Answer: (C) $0.5\ \text{mA};\ 8.5\ \text{mA}$ · Key from source paper

Q180 JEE Main 2019 · 9 Apr · Shift 1 MCQ

An NPN transistor is used in common emitter configuration as an amplifier with 1 kΩ load resistance. Signal voltage of 10 mV is applied across the base-emitter. This produces a 3 mA change in the collector current and 15 μA change in the base current of the amplifier. The input resistance and voltage gain are:

(A) 0.33 kΩ, 1.5
(B) 0.67 kΩ, 300
(C) 0.67 kΩ, 200
(D) 0.33 k Ω, 300

Answer: (B) 0.67 kΩ, 300 · Key from source paper

Q181 JEE Main 2019 · 9 Apr · Shift 2 MCQ

The logic gate equivalent to the given logic circuit is:
(see the figure above)

Q29. The logic gate equivalent to the given logic circuit is:

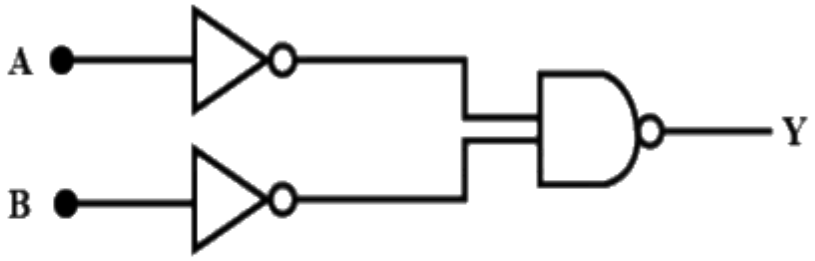

(1) NAND (2) AND
(3) NOR (4) OR

(A) NAND
(B) AND
(C) NOR
(D) OR

Answer: (D) OR · Key from source paper

Q182 JEE Main 2019 · 8 Apr · Shift 1 MCQ

The reverse break down voltage of a Zener diode is 5.6 V in the given circuit.
(see the figure above)
The current I_z through the Zener is:

Q29. The reverse break down voltage of a Zener diode is 5.6 V in the given circuit.

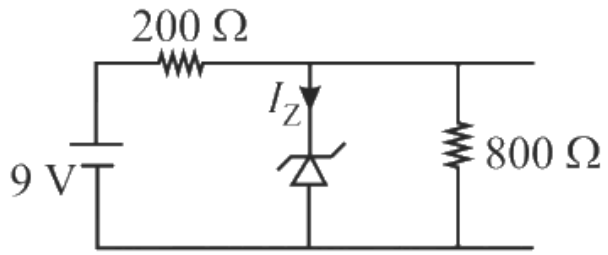

The current I_z through the Zener is:

(1) 10 mA (2) 7 mA (3) 17 mA (4) 15 mA

(A) 10 mA
(B) 7 mA
(C) 17 mA
(D) 15 mA

Answer: (A) 10 mA · Key from source paper

Q183 JEE Main 2019 · 8 Apr · Shift 2 MCQ

A common emitter amplifier circuit, built using an NPN transistor, is shown in the figure. Its dc current gain is 250, R_C = 1 kΩ and V_{CC} = 10 V . The minimum base current for V_{CE} to reach saturation is

(see the figure above)

Q29. A common emitter amplifier circuit, built using an NPN transistor, is shown in the figure. Its dc current gain is 250, $R_C = 1\ \text{k}\Omega$ and $V_{CC} = 10$ V . The minimum base current for V_{CE} to reach saturation is

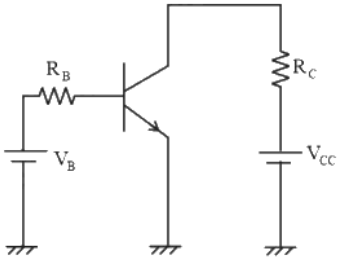

(1) 10 μA (2) 40 μA
(3) 7 μA (4) 100 μA

(A) 10 μA
(B) 40 μA
(C) 7 μA
(D) 100 μA

Answer: (B) 40 μA · Key from source paper

Q184 JEE Main 2019 · 12 Jan · Shift 1 MCQ

The output of the given logic circuit is:

(see the figure above)

Q27. The output of the given logic circuit is:

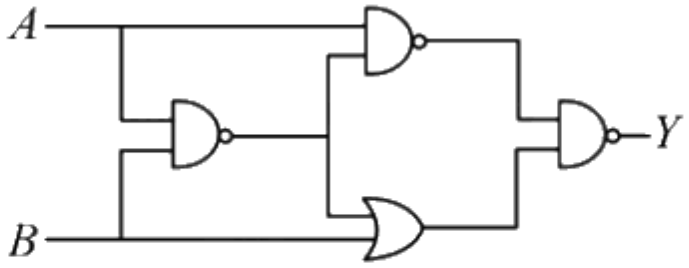

(1) $A\overline{B}$

(2) $\overline{A}B$

(3) $AB + \overline{AB}$

(4) $A\overline{B} + \overline{A}B$

(A) $A\overline{B}$

(B) $\overline{A}B$

(C) $\overline{AB + \overline{AB}}$

(D) $A\overline{B} + \overline{A}B$

Answer: (A) $A\overline{B}$ · Key from source paper

Q185 JEE Main 2019 · 12 Jan · Shift 2 MCQ

In the figure, given that V_{BB} supply can vary from 0 to 5.0 V, $V_{CC} = 5\ V$, $\beta_{dc} = 200$, $R_B = 100\ k\Omega$, $R_C = 1\ k\Omega$ and $V_{BE} = 1.0$V. The minimum base current and the input voltage at which the transistor will go to saturation, will be, respectively:

(see the figure above)

Q28. In the figure, given that V_{BB} supply can vary from 0 to 5.0 V, $V_{CC} = 5\ V$, $\beta_{dc} = 200$, $R_B = 100\ k\Omega$, $R_C = 1\ k\Omega$ and $V_{BE} = 1.0$V. The minimum base current and the input voltage at which the transistor will go to saturation, will be, respectively:

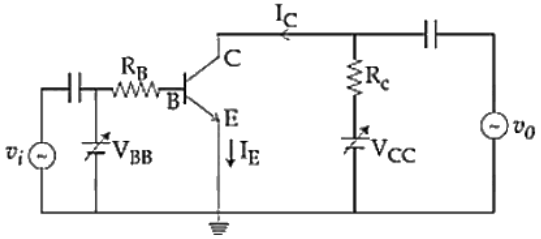

(1) 25 μA and 2.8 V

(2) 20μA and 2.8V

(3) 25μA and 3.5V

(4) 20μA and 3.5V

(A) $25\ \mu A$ and $2.8\ V$
(B) $20\mu A$ and $2.8V$
(C) $25\mu A$ and $3.5V$
(D) $20\mu A$ and $3.5V$

Answer: (C) $25\mu A$ and $3.5V$ · Key from source paper

Q186 JEE Main 2019 · 11 Jan · Shift 1 MCQ

In the given circuit the current through Zener Diode is close to:
(see the figure above)

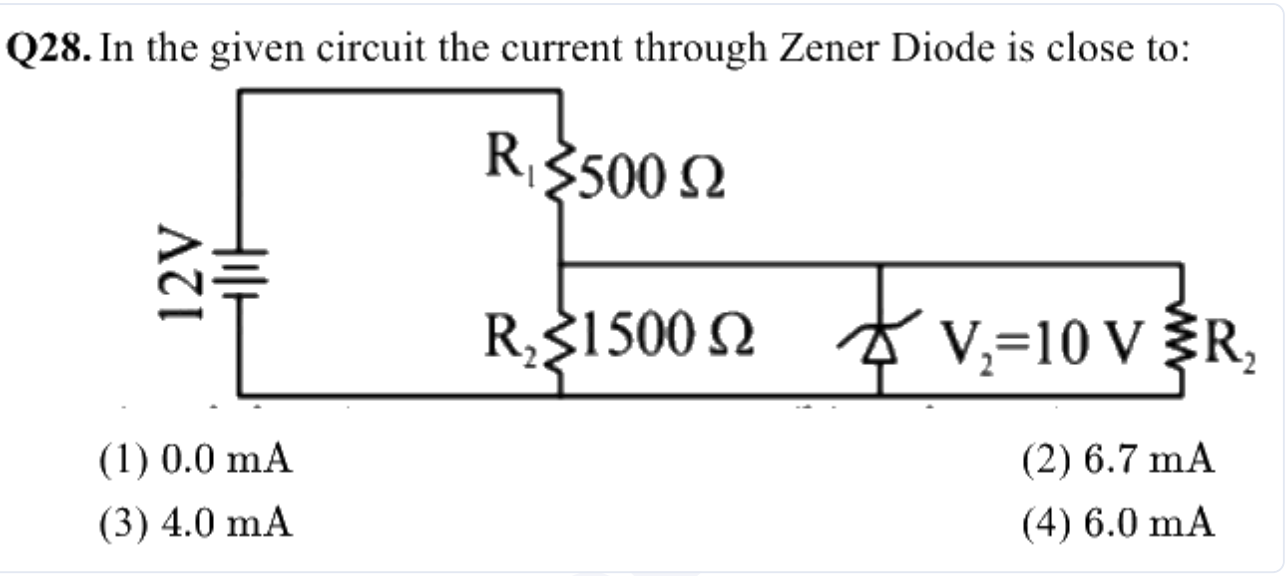

(A) 0.0 mA
(B) 6.7 mA
(C) 4.0 mA
(D) 6.0 mA

Answer: (A) 0.0 mA · Key from source paper

Q187 JEE Main 2019 · 11 Jan · Shift 2 MCQ

The circuit shown below contains two ideal diodes, each with a forward resistance of 50Ω. If the battery voltage is 6 V, the current through the 100Ω resistance (in Amperes) is:
(see the figure above)

Q28. The circuit shown below contains two ideal diodes, each with a forward resistance of 50Ω. If the battery voltage is 6 V, the current through the 100Ω resistance (in Amperes) is:

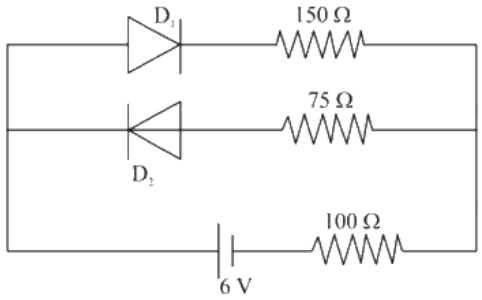

(1) 0.036
(2) 0.02
(3) 0.027
(4) 0.03

(A) 0.036
(B) 0.02
(C) 0.027
(D) 0.03

Answer: (B) 0.02 · Key from source paper

Q188 JEE Main 2019 · 10 Jan · Shift 1 MCQ

To get output '1' at R, for the given logic gate circuit the input values must be:
(see the figure above)

Q28. To get output '1' at R, for the given logic gate circuit the input values must be:

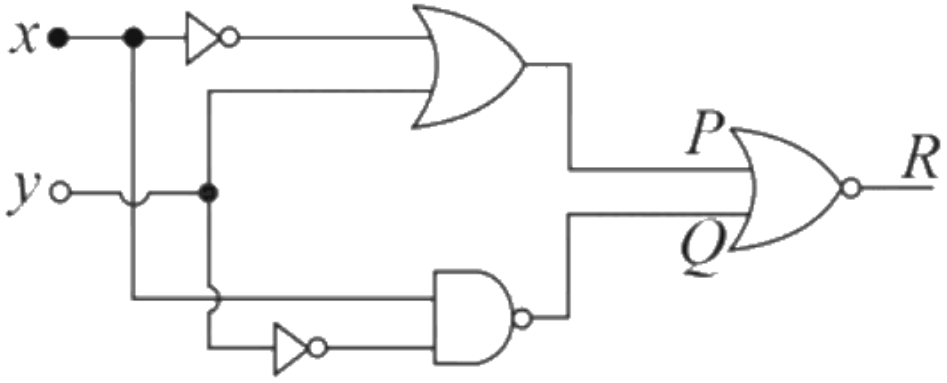

(1) $X = 1,\ Y = 1$
(2) $X = 0,\ Y = 0$
(3) $X = 0,\ Y = 1$
(4) $X = 1,\ Y = 0$

(A) $X = 1,\ Y = 1$
(B) $X = 0,\ Y = 0$
(C) $X = 0,\ Y = 1$
(D) $X = 1,\ Y = 0$

Answer: (D) $X = 1,\ Y = 0$ · Key from source paper

Q189 JEE Main 2019 · 10 Jan · Shift 2 MCQ

For the circuit shown below, the current through the Zener diode is
(see the figure above)

Q29. For the circuit shown below, the current through the Zener diode is

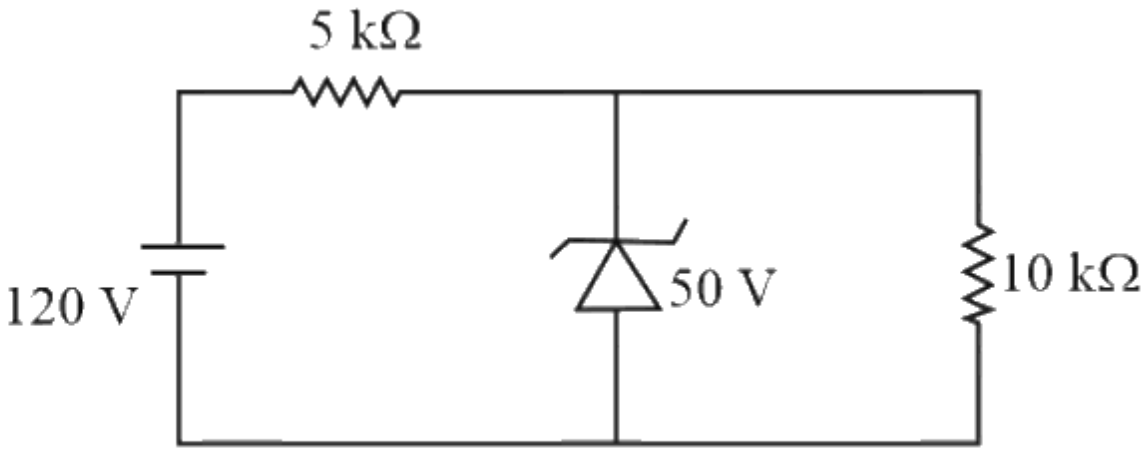

(1) zero.
(2) 5 mA.
(3) 9 mA.
(4) 14 mA.

(A) zero.
(B) $5\ \mathrm{mA}$.
(C) $9\ \mathrm{mA}$.
(D) $14\ \mathrm{mA}$.

Answer: (C) $9\ \mathrm{mA}$. · Key from source paper

Q190 JEE Main 2019 · 9 Jan · Shift 1 MCQ

Mobility of electrons in a semiconductor is defined as the ratio of their drift velocity to the applied electric field. If, for an N-type semiconductor, the density of electrons is $10^{19}\ \mathrm{m}^{-3}$ and their mobility is $1.6\ \mathrm{m}^2\ \mathrm{V}^{-1}\ \mathrm{s}^{-1}$, then the resistivity of the semiconductor (since it is N-type semiconductor contribution of holes is ignored) is close to:

(A) $0.2\ \Omega\ \mathrm{m}$
(B) $4\ \Omega\ \mathrm{m}$
(C) $2\ \Omega\ \mathrm{m}$
(D) $0.4\ \Omega\ \mathrm{m}$

Answer: (D) $0.4\ \Omega\ \mathrm{m}$ · Key from source paper

Q191 JEE Main 2019 · 9 Jan · Shift 2 MCQ

Ge and Si diodes start conducting at $0.3\ V$ and $0.7\ V$ respectively. In the following figure if Ge diode connection are reversed, the value of V_0 changes by: (assume that the Ge diode has large breakdown

voltage)

(see the figure above)

Q28. Ge and Si diodes start conducting at $0.3\ V$ and $0.7\ V$ respectively. In the following figure if Ge diode connection are reversed, the value of V_0 changes by: (assume that the Ge diode has large breakdown voltage)

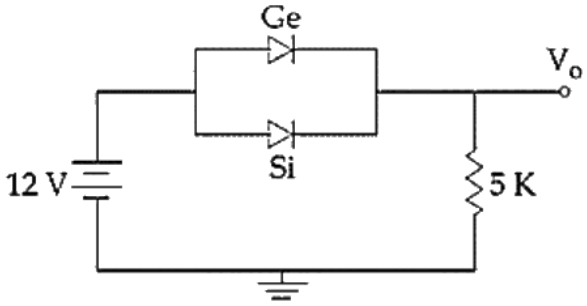

(1) $0.8\ V$ (2) $0.4\ V$
(3) $0.2\ V$ (4) $0.6\ V$

(A) $0.8\ V$
(B) $0.4\ V$
(C) $0.2\ V$
(D) $0.6\ V$

Answer: (B) $0.4\ V$ · Key from source paper

Q192 JEE Main 2018 · 16 Apr · Online MCQ

In the given circuit the current through zener diode is:

(see the figure above)

Q29. In the given circuit the current through zener diode is:

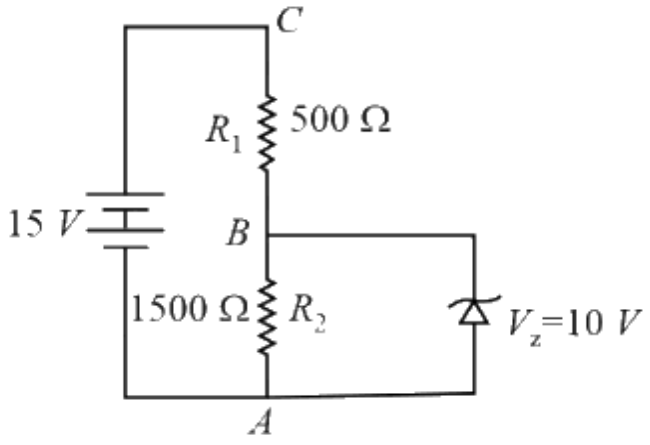

(1) 3.3 mA (2) 2.5 mA
(3) 5.5 mA (4) 6.7 mA

(A) 3.3 mA
(B) 2.5 mA
(C) 5.5 mA
(D) 6.7 mA

Answer: (A) 3.3 mA · Key from source paper

Q193 JEE Main 2018 · 15 Apr · Shift 1 MCQ

In a common emitter configuration with suitable bias, it is given than (sic) $\mathrm{R_L}$ is the load resistance and R_{BE} is small signal dynamic resistance (input side). Then, voltage gain, current gain and power gain are given, respectively, by: [β is current gain, I_B, I_C, I_E are respectively base, collector and emitter currents]

(A) $\beta\frac{R_L}{R_{BE}}, \frac{\Delta I_E}{\Delta I_B}, \beta^2\frac{R_L}{R_{BE}}$
(B) $\beta^2\frac{R_L}{R_{BE}}, \frac{\Delta I_C}{\Delta I_B}, \beta\frac{R_L}{R_{BE}}$
(C) $\beta^2\frac{R_L}{R_{BE}}, \frac{\Delta I_C}{\Delta I_E}, \beta^2\frac{R_L}{R_{BE}}$
(D) $\beta\frac{R_L}{R_{BE}}, \frac{\Delta I_C}{\Delta I_B}, \beta^2\frac{R_L}{R_{BE}}$

Answer: (D) $\beta\frac{R_L}{R_{BE}}, \frac{\Delta I_C}{\Delta I_B}, \beta^2\frac{R_L}{R_{BE}}$ · Key from source paper

Q194 JEE Main 2018 · 15 Apr · Shift 2 MCQ

Truth table for the given circuit will be
(see the figure above)

Q29.

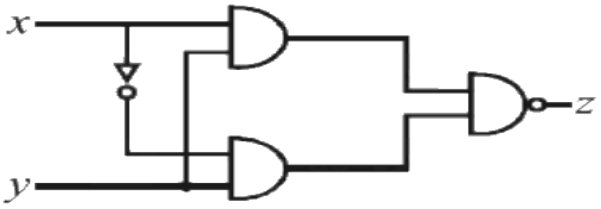

Truth table for the given circuit will be

(1)

x	y	z
0	0	1
0	1	1
1	0	1
1	1	0

(2)

x	y	z
0	0	0
0	1	0
1	0	0
1	1	1

(3)

x	y	z
0	0	1
0	1	1
1	0	1
1	1	1

(4)

x	y	z
0	0	0
0	1	1
1	0	1
1	1	1

(A) *see figure*
(B) *see figure*
(C) *see figure*
(D) *see figure*

Answer: (C) · Key from source paper

Q195 JEE Main 2018 · 8 Apr · Offline MCQ

The reading of the ammeter for a silicon diode in the given circuit is:
(see the figure above)

Q29. The reading of the ammeter for a silicon diode in the given circuit is:

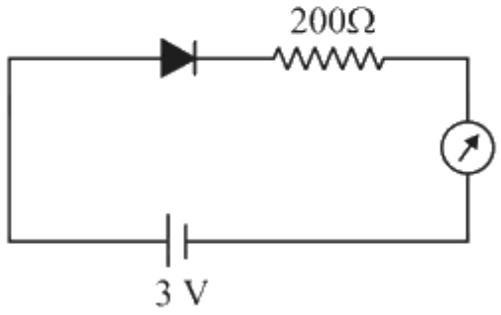

(1) 13 .5 mA
(2) 0
(3) 15 mA
(4) 11 .5 mA

(A) 13.5 mA
(B) 0
(C) 15 mA
(D) 11.5 mA

Answer: (D) 11.5 mA · Key from source paper

Q196 JEE Main 2017 · 9 Apr · Online MCQ

The current gain of a common emitter amplifier is 69. If the emitter current is 7.0 mA, collector current is :

(A) 69 mA
(B) 0.69 mA
(C) 6.9 mA
(D) 9.6 mA

Answer: (C) 6.9 mA · Key from source paper

Q197 JEE Main 2017 · 8 Apr · Online MCQ

The $V - I$ characteristic of a diode is shown in the figure. The ratio of forward to reverse bias resistance is:

(see the figure above)

Q28. The $V - I$ characteristic of a diode is shown in the figure. The ratio of forward to reverse bias resistance is:

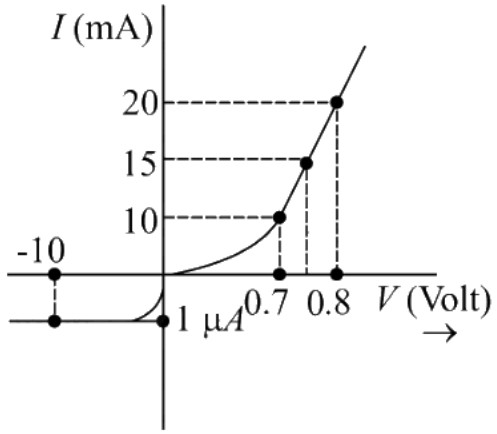

(1) 100
(2) 10^6
(3) 10^{-6}
(4) 10

(A) 100
(B) 10^6
(C) 10^{-6}
(D) 10

Answer: (C) 10^{-6} · Key from source paper

Q198 JEE Main 2017 · 8 Apr · Online MCQ

The conductivity of a semiconductor sample having electron concentration of 5×10^{18} electrons m^{-3}, hole concentration of 5×10^{19} holes m^{-3}, electron mobility of 2.0 $\mathrm{m}^2\ \mathrm{V}^{-1}\ \mathrm{s}^{-1}$ and hole mobility of 0.01 $\mathrm{m}^2\ \mathrm{V}^{-1}\ \mathrm{s}^{-1}$ is (Take charge of an electron as 1.6×10^{-19} C)

(A) $1.83\ (\Omega\,\mathrm{m})^{-1}$
(B) $1.65\ (\Omega\,\mathrm{m})^{-1}$
(C) $1.20\ (\Omega\,\mathrm{m})^{-1}$
(D) $0.59\ (\Omega\,\mathrm{m})^{-1}$

Answer: (B) $1.65\ (\Omega\,\mathrm{m})^{-1}$ · Key from source paper

Q199 JEE Main 2017 · 2 Apr · Offline MCQ

In a common emitter amplifier circuit using an n - p - n transistor, the phase difference between the input and the output voltages will be:

(A) 180°
(B) 45°
(C) 90°
(D) 135°

Answer: (A) 180° · Key from source paper

Q200 JEE Main 2016 · 10 Apr · Online MCQ

The ratio (R) of output resistance r_o, and the input resistance r_i in measurements of input and output characteristics of a transistor is typically in the range :

(A) $R \sim 10^2 - 10^3$
(B) $R \sim 1 - 10$
(C) $R \sim 0.1 - 1.0$
(D) $R \sim 0.1 - 0.01$

Answer: (A) $R \sim 10^2 - 10^3$ · Key from source paper

Q201 JEE Main 2016 · 10 Apr · Online MCQ

To get an output of 1 from the circuit shown in the figure the input must be:
(see the figure above)

Q28. To get an output of 1 from the circuit shown in the figure the input must be:

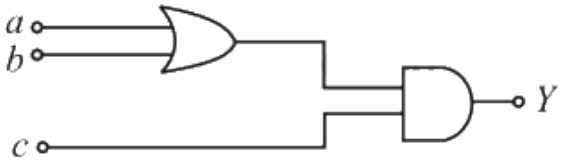

(1) $a = 0,\ b = 0,\ c = 1$
(2) $a = 1,\ b = 0,\ c = 0$
(3) $a = 1,\ b = 0,\ c = 1$
(4) $a = 0,\ b = 1,\ c = 0$

(A) $a = 0,\ b = 0,\ c = 1$
(B) $a = 1,\ b = 0,\ c = 0$
(C) $a = 1,\ b = 0,\ c = 1$
(D) $a = 0,\ b = 1,\ c = 0$

Answer: (C) $a = 1,\ b = 0,\ c = 1$ · Key from source paper

Q202 JEE Main 2016 · 10 Apr · Online MCQ

A realistic graph depicting the variation of the reciprocal of input resistance in an input characteristics measurement in a common emitter transistor configuration is :

Q29. A realistic graph depicting the variation of the reciprocal of input resistance in an input characteristics measurement in a common emitter transistor configuration is :

(1) 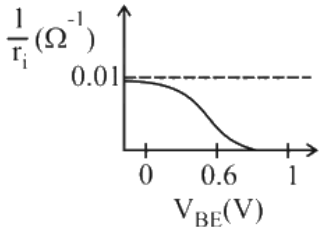

(2) 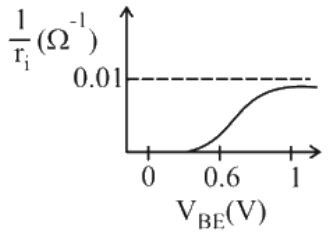

(3) 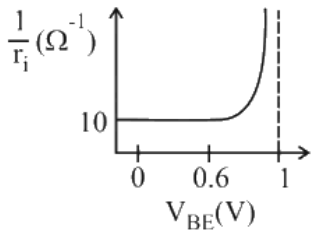

(4) 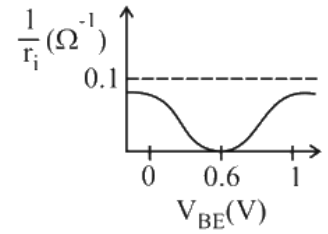

(A) *see figure*
(B) *see figure*
(C) *see figure*
(D) *see figure*

Answer: (B) · Key from source paper

Q203 JEE Main 2016 · 9 Apr · Online MCQ

A Zener diode with a breakdown voltage of 4 V is connected in series with a resistance R to a battery of emf 10 V. The maximum power dissipation rating for the Zener diode is 1 W. The value of R to ensure maximum power dissipation across the diode is

(A) $12\ \Omega$
(B) $24\ \Omega$
(C) $36\ \Omega$
(D) $6\ \Omega$

Answer: (B) $24\ \Omega$ · Key from source paper

Q204 JEE Main 2016 · 9 Apr · Online MCQ

The truth table given in fig. represents:

A B Y
0 0 0
0 1 1
1 0 1
1 1 1

(A) OR-Gate
(B) NAND-Gate
(C) AND-Gate
(D) NOR-Gate

Answer: (A) OR-Gate · Key from source paper

Q205 JEE Main 2016 · 3 Apr · Offline MCQ

For a common emitter configuration, if α and β have their usual meanings, the correct relationship between α and β is:

(A) $\alpha = \frac{\beta}{1+\beta}$
(B) $\alpha = \frac{\beta^2}{1+\beta^2}$
(C) $\frac{1}{\alpha} = \frac{1}{\beta} - 1$
(D) $\alpha = \frac{\beta}{1-\beta}$

Answer: (A) $\alpha = \frac{\beta}{1+\beta}$ · Key from source paper

Q206 JEE Main 2016 · 3 Apr · Offline MCQ

If a, b, c, d are inputs to a gate and x is its output, then, as per the following time graph, the gate is:
(see the figure above)

Q26. If a, b, c, d are inputs to a gate and **x** is its output, then, as per the following time graph, the gate is:

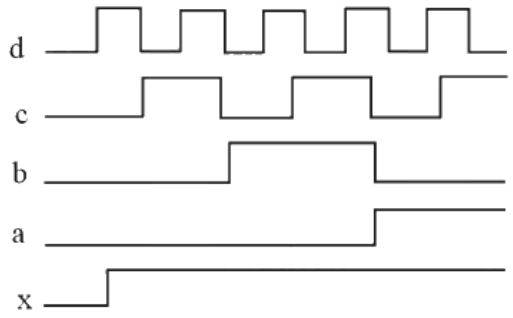

(1) OR
(2) NAND
(3) NOT
(4) AND

(A) OR
(B) NAND
(C) NOT
(D) AND

Answer: (A) OR · Key from source paper

Q207 JEE Main 2016 · 3 Apr · Offline MCQ

The temperature dependence of resistance of Cu and undoped Si in the temperature range $300 - 400$ K is best described by

(A) linear increase for Cu, exponential decrease for Si
(B) linear decrease for Cu, linear decrease for Si
(C) linear increase for Cu, linear increase for Si
(D) linear increase for Cu, exponential increase for Si

Answer: (A) linear increase for Cu, exponential decrease for Si · Key from source paper

Q208 JEE Main 2016 · 3 Apr · Offline MCQ

Identify the semiconductor devices whose characteristics are given below, in the order (a), (b), (c), (d):
(see the figure above)

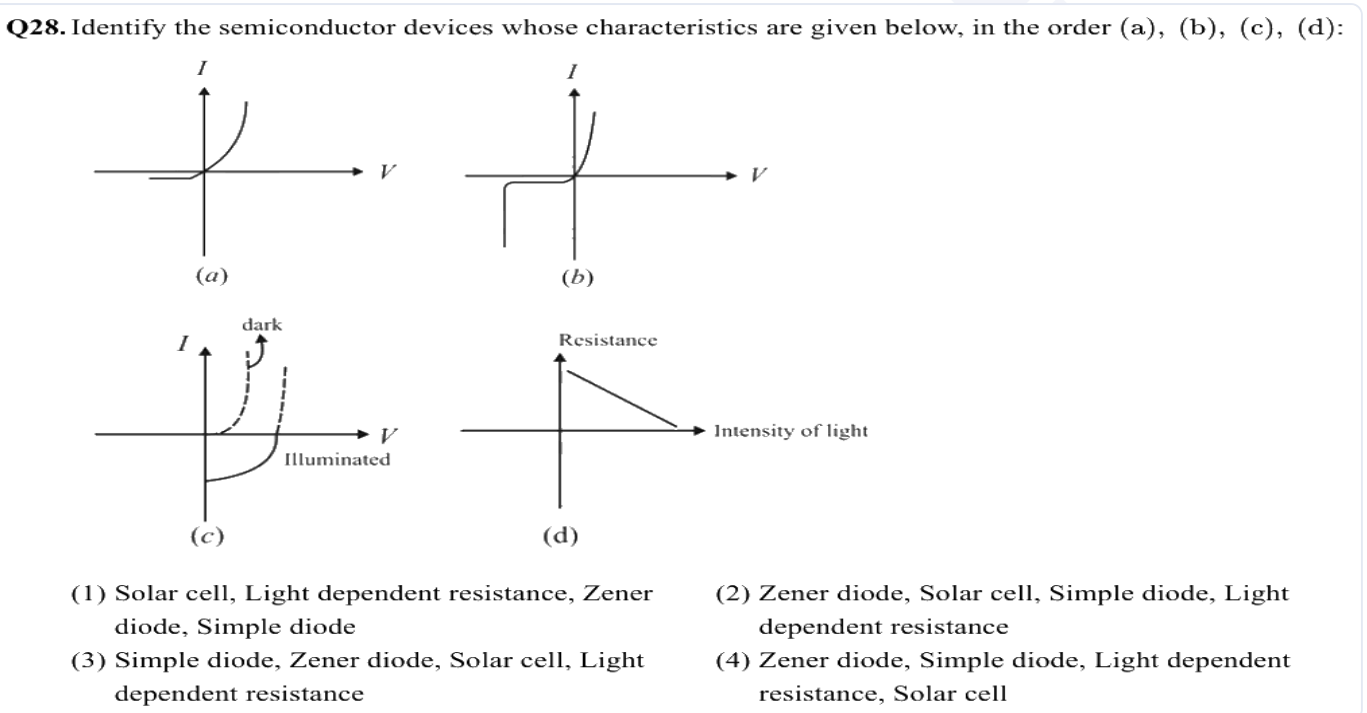

(A) Solar cell, Light dependent resistance, Zener diode, Simple diode
(B) Zener diode, Solar cell, Simple diode, Light dependent resistance
(C) Simple diode, Zener diode, Solar cell, Light dependent resistance
(D) Zener diode, Simple diode, Light dependent resistance, Solar cell

Answer: (C) Simple diode, Zener diode, Solar cell, Light dependent resistance · Key from source paper

Q209 JEE Main 2015 · 11 Apr · Online MCQ

A 2 V battery is connected across AB as shown in the figure. The value of the current supplied by the battery when in first case battery's positive terminal is connected to A and in second case when positive terminal of battery is connected to B will respectively be:
(see the figure above)

Q31. A 2 V battery is connected across AB as shown in the figure. The value of the current supplied by the battery when in first case battery's positive terminal is connected to A and in second case when positive terminal of battery is connected to B will respectively be:

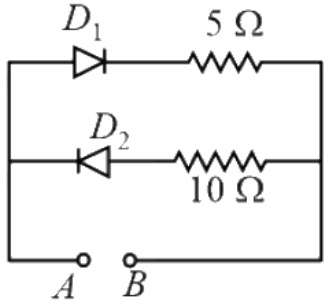

(1) 0.2 A and 0.1 A
(2) 0.1 A and 0.2 A
(3) 0.2 A and 0.4 A
(4) 0.4 A and 0.2 A

(A) 0.2 A and 0.1 A
(B) 0.1 A and 0.2 A
(C) 0.2 A and 0.4 A
(D) 0.4 A and 0.2 A

Answer: (D) 0.4 A and 0.2 A · Key from source paper

Q210 JEE Main 2015 · 11 Apr · Online MCQ

The value of the resistor, R_S, needed in the DC voltage regulator circuit shown here, equals:
(see the figure above)

Q30. The value of the resistor, R_S, needed in the DC voltage regulator circuit shown here, equals:

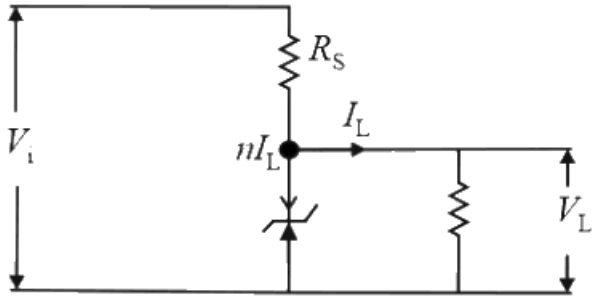

(1) $\frac{(V_i+V_L)}{(n+1)I_L}$
(2) $\frac{(V_i-V_L)}{n\,I_L}$
(3) $\frac{(V_i+V_L)}{n\,I_L}$
(4) $\frac{(V_i-V_L)}{(n+1)I_L}$

(A) $\frac{(V_i+V_L)}{(n+1)I_L}$
(B) $\frac{(V_i-V_L)}{n\,I_L}$
(C) $\frac{(V_i+V_L)}{n\,I_L}$
(D) $\frac{(V_i-V_L)}{(n+1)I_L}$

Answer: (D) $\frac{(V_i-V_L)}{(n+1)I_L}$ · Key from source paper

Q211 JEE Main 2015 · 10 Apr · Online MCQ

In an unbiased p - n junction electrons diffuse from n-region to p-region because:

(A) electrons travel across the junction due to potential difference
(B) only electrons move from n to p region and not the vice - versa
(C) electron concentration in n - region is more as compared to that in p - region
(D) holes in p - region attract them

Answer: (C) electron concentration in n - region is more as compared to that in p - region · Key from source paper

Q212 JEE Main 2014 · 19 Apr · Online MCQ

see figure

Q28.

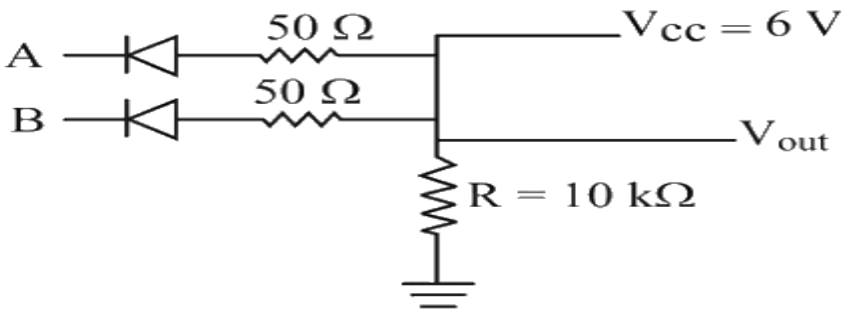

Given, A and B are input terminals
Logic 1 is$>$ 5 V
Logic 0 is$<$ 1 V

Which logic gate operation, the following circuit does?
Note: This question was awarded a bonus. C option changed.
(1) OR gate. (2) NOR gate.
(3) Output will always be one. (4) XOR gate.

(A) OR gate.
(B) NOR gate.
(C) Output will always be one.
(D) XOR gate.

Answer: (C) Output will always be one. · Key from source paper

Q213 JEE Main 2014 · 12 Apr · Online MCQ

For LED's to emit light in visible region of electromagnetic light, it should have energy band gap in the range of:

(A) 0.1eV to 0.4eV
(B) 0.5eV to 0.8eV
(C) 0.9eV to 1.6eV
(D) 1.7eV to 3.0eV

Answer: (D) 1.7eV to 3.0eV · Key from source paper

Q214

JEE Main 2014 · 11 Apr · Online · MCQ

A Zener diode is connected to a battery and a load as show below:

(see the figure above)

The currents, I, I_Z and I_L are respectively.

Q30. A Zener diode is connected to a battery and a load as show below:

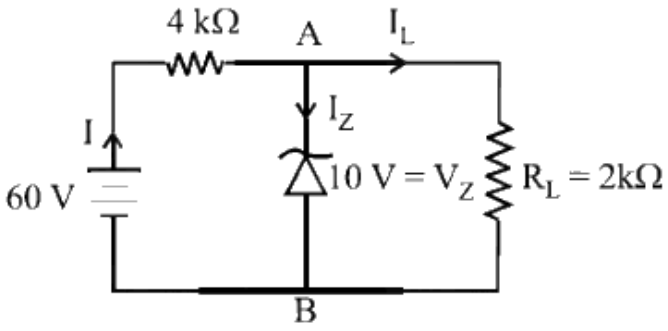

The currents, I, I_Z and I_L are respectively.

(1) 15 mA, 5 mA, 10 mA
(2) 15 mA, 7.5 mA, 7.5 mA
(3) 12.5 mA, 5 mA, 7.5 mA
(4) 12.5 mA, 7.5 mA, 5 mA

(A) $15\text{ mA}, 5\text{ mA}, 10\text{ mA}$
(B) $15\text{ mA}, 7.5\text{ mA}, 7.5\text{ mA}$
(C) $12.5\text{ mA}, 5\text{ mA}, 7.5\text{ mA}$
(D) $12.5\text{ mA}, 7.5\text{ mA}, 5\text{ mA}$

Answer: (D) $12.5\text{ mA}, 7.5\text{ mA}, 5\text{ mA}$ · Key from source paper

Q215

JEE Main 2014 · 9 Apr · Online · MCQ

Identify the gate and match A, B, Y in the bracket to check.

(see the figure above)

Q29. Identify the gate and match A, B, Y in the bracket to check.

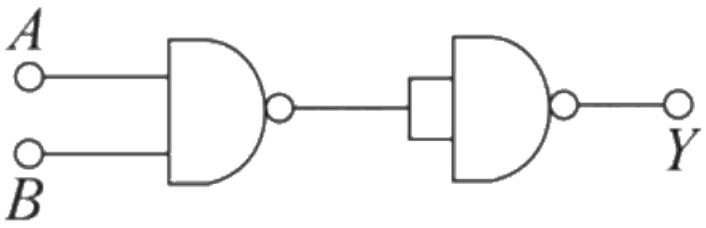

(1) $OR\ (A = 1,\ B = 1,\ Y = 0)$
(2) $XOR\ (A = 0,\ B = 0,\ Y = 0)$
(3) $NOT\ (A = 1,\ B = 1,\ Y = 1)$
(4) $AND\ (A = 1,\ B = 1,\ Y = 1)$

(A) $OR\ (A = 1, B = 1, Y = 0)$
(B) $XOR\ (A = 0, B = 0, Y = 0)$
(C) $NOT\ (A = 1, B = 1, Y = 1)$
(D) $AND\ (A = 1, B = 1, Y = 1)$

Answer: (D) $AND\ (A = 1, B = 1, Y = 1)$ · Key from source paper

Q216 JEE Main 2014 · 6 Apr · Offline MCQ

The forward biased diode connection is :

(see the figure above)

Q29. The forward biased diode connection is :

(1) 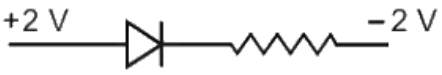

(2) 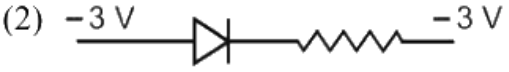

(3) 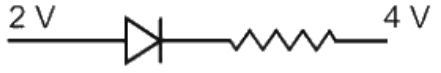

(4) 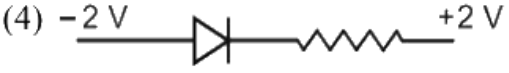

(A) *see figure*
(B) *see figure*
(C) *see figure*
(D) *see figure*

Answer: (A) · Key from source paper

Q217 JEE Main 2013 · 25 Apr · Online MCQ

Which of the following circuits correctly represents the following truth table ?

(see the figure above)

Q29.

A	B	C
0	0	0
0	1	0
1	0	1
1	1	0

Which of the following circuits correctly represents the following truth table ?

(1) 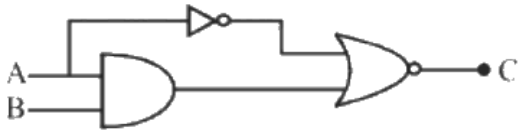

(2) 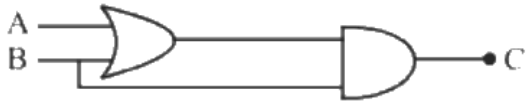

(3) 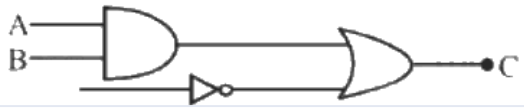

(4) 

(A) *see figure*

(B) *see figure*

(C) *see figure*

(D) *see figure*

Answer: (A) · Key from source paper

Q218 JEE Main 2013 · 23 Apr · Online MCQ

A system of four gates is set up as shown. The 'truth table' corresponding to this system is :
(see the figure above)

Q28. A system of four gates is set up as shown. The 'truth table' corresponding to this system is :

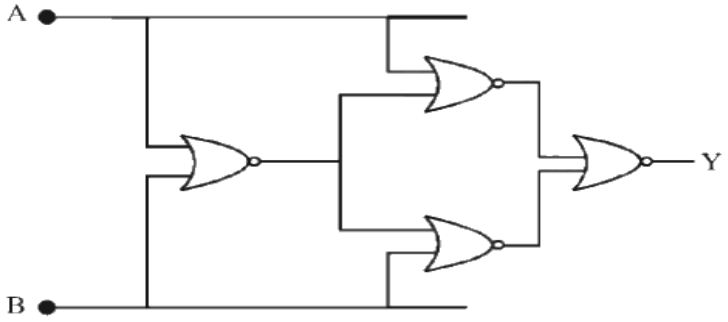

(1)

A	B	Y
0	0	1
0	1	0
1	0	0
1	1	1

(2)

A	B	Y
0	0	0
0	1	0
1	0	1
1	1	0

(3)

A	B	Y
0	0	1
0	1	0
1	0	1
1	1	0

(4)

A	B	Y
0	0	1
0	1	1
1	0	0
1	1	0

(A) *see figure*
(B) *see figure*
(C) *see figure*
(D) *see figure*

Answer: (A) · Key from source paper

Q219 JEE Main 2013 · 22 Apr · Online MCQ

Figure shows a circuit in which three identical diodes are used. Each diode has forward resistance of 20Ω and infinite backward resistance. Resistors $R_1 = R_2 = R_3 = 50\Omega$. Battery voltage is 6 V. The current through R_3 is :
(see the figure above)

Q30. Figure shows a circuit in which three identical diodes are used. Each diode has forward resistance of 20Ω and infinite backward resistance. Resistors $R_1 = R_2 = R_3 = 50\Omega$. Battery voltage is 6 V. The current through R_3

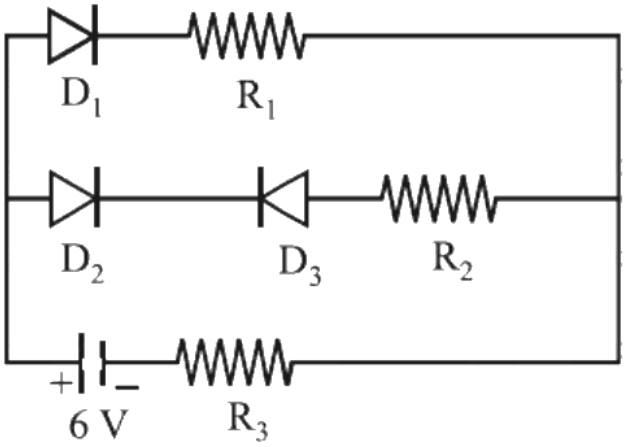

is :

(1) 50 mA
(2) 100 mA
(3) 60 mA
(4) 25 mA

(A) 50 mA
(B) 100 mA
(C) 60 mA
(D) 25 mA

Answer: (A) 50 mA · Key from source paper

Q220 JEE Main 2013 · 9 Apr · Online MCQ

Consider two npn transistors as shown in figure. If 0 Volts corresponds to false and 5 Volts correspond to true then the output at C corresponds to :

(A) A NAND B
(B) A OR B
(C) AAND B
(D) ANOR B

Answer: (D) ANOR B · Checked by our team

Q221 JEE Main 2013 · 7 Apr · Offline MCQ

The I – V characteristics of an LED is:

Q30. The I – V characteristics of an LED is:

(1)

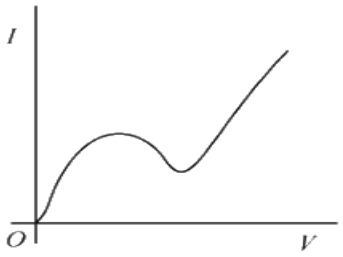

(2)

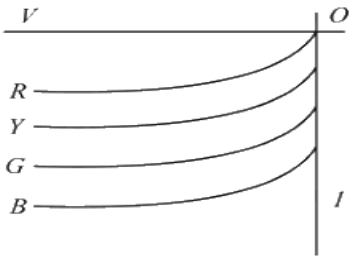

(3)

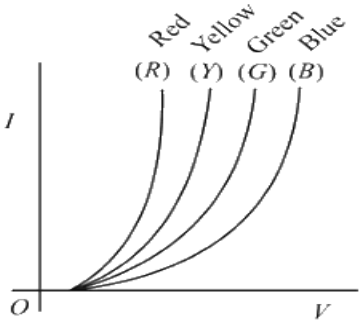

(4)

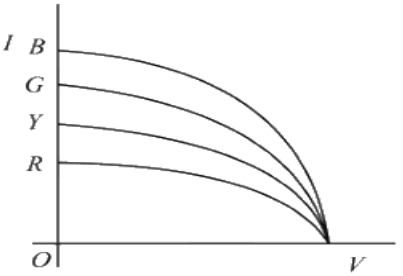

(A) *see figure*
(B) *see figure*
(C) *see figure*
(D) *see figure*

Answer: (C) · Key from source paper

Q222 AIEEE 2012 · 26 May · Online MCQ

The figure shows a combination of two NOT gates and a NOR gate.
(see the figure above)
The combination is equivalent to a

Q30. The figure shows a combination of two NOT gates and a NOR gate.

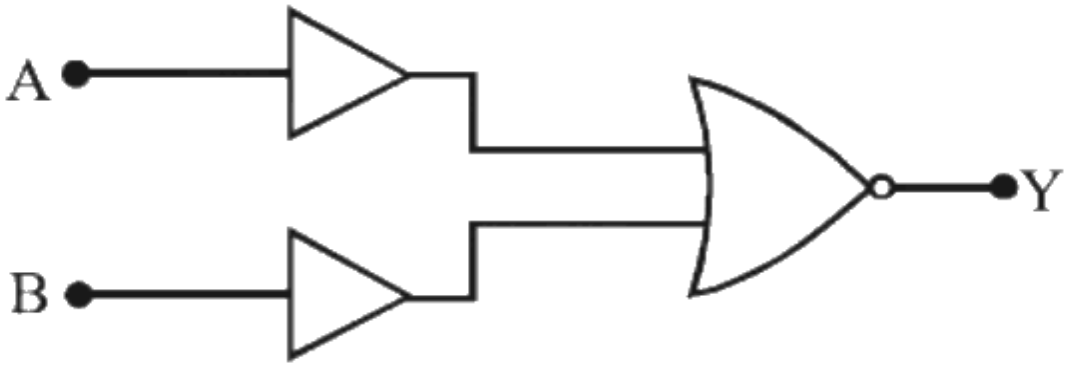

The combination is equivalent to a

(1) NAND gate
(2) NOR gate
(3) AND gate
(4) OR gate

(A) NAND gate
(B) NOR gate
(C) AND gate
(D) OR gate

Answer: (C) AND gate · Key from source paper

Q223

AIEEE 2012 · 19 May · Online · MCQ

Which one of the following is the Boolean expression for NOR gate?

(A) $Y = \overline{A + B}$
(B) $Y = \overline{A \cdot B}$
(C) $Y = A \cdot B$
(D) $Y = \bar{A}$

Answer: (A) $Y = \overline{A + B}$ · Key from source paper

Q224

AIEEE 2012 · 12 May · Online · MCQ

This question has Statement 1 and Statement 2. Of the four choices given after the Statements, choose the one that best describes the two Statements. Statement 1: A pure semiconductor has negative temperature coefficient of resistance. Statement 2: On raising the temperature, more charge carriers are released into the conduction band.

(A) Statement 1 is false, Statement 2 is true.
(B) Statement 1 is true, Statement 2 is false.
(C) Statement 1 is true, Statement 2 is true, Statement 2 is not a correct explanation of Statement 1.
(D) Statement 1 is true, Statement 2 is true, Statement 2 is the correct explanation of Statement 1.

Answer: (D) Statement 1 is true, Statement 2 is true, Statement 2 is the correct explanation of Statement 1. · Key from source paper

Q225 AIEEE 2012 · 7 May · Online MCQ

Which logic gate with inputs A and B performs the same operation as that performed by the following circuit?
(see the figure above)

Q29. Which logic gate with inputs A and B performs the same operation as that performed by the following circuit?

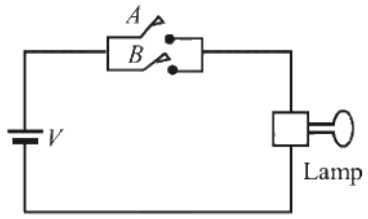

(1) NAND gate
(2) OR gate
(3) NOR gate
(4) AND gate

(A) NAND gate
(B) OR gate
(C) NOR gate
(D) AND gate

Answer: (B) OR gate · Key from source paper

Q226 AIEEE 2012 · Offline MCQ

Truth table for system of four NAND gates as shown in figure is
(see the figure above)

Q28. Truth table for system of four NAND gates as shown in figure is

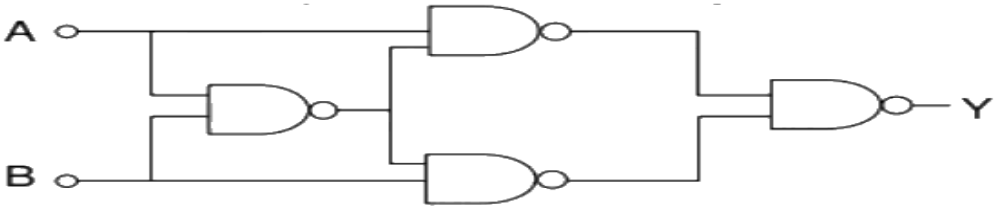

(1)

A	B	Y
0	0	0
0	1	1
1	0	1
1	1	0

(2)

A	B	Y
0	0	0
0	1	0
1	0	1
1	1	1

(3)

A	B	Y
0	0	1
0	1	1
1	0	0
1	1	0

(4)

A	B	Y
0	0	1
0	1	0
1	0	0
1	1	1

(A) *see figure*
(B) *see figure*
(C) *see figure*
(D) *see figure*

Answer: (A) · Key from source paper

Q227 AIEEE 2010 MCQ

The combination of gates shown below yields
(see the figure above)

Q30.

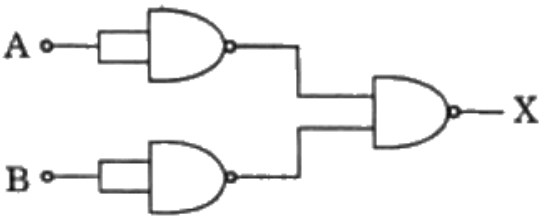

The combination of gates shown below yields
(1) OR gate
(2) NOT gate
(3) XOR gate
(4) NAND gate

(A) OR gate
(B) NOT gate
(C) XOR gate
(D) NAND gate

Answer: (A) OR gate · Key from source paper

Q228 AIEEE 2009 MCQ

A p-n junction (D) shown in the figure can act as a rectifier. An alternating current source (V) is connected in
(see the figure above)
the circuit.

Q28. A p-n junction (D) shown in the figure can act as a rectifier. An alternating current source (V) is connected in

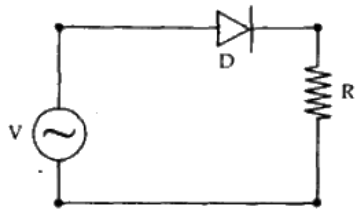

the circuit.

(1) 

(2) 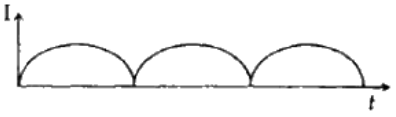

(3) 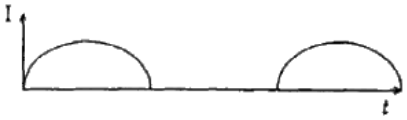

(4) 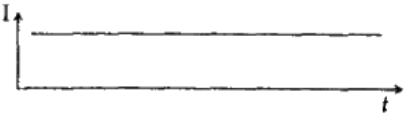

(A) *see figure*
(B) *see figure*
(C) *see figure*
(D) *see figure*

Answer: (C) · Key from source paper

Q229 AIEEE 2009 MCQ

The logic circuit shown below has the input waveforms 'A' and 'B' as shown. Pick out the correct output
(see the figure above)
waveform.

Q29. The logic circuit shown below has the input waveforms 'A' and 'B' as shown. Pick out the correct output waveform.

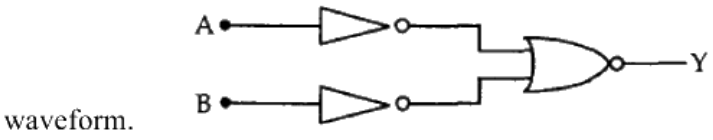

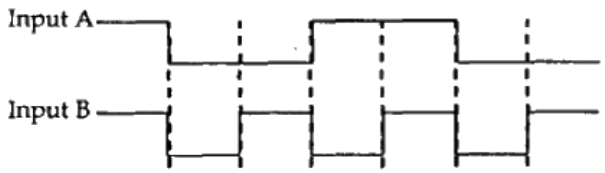

(1) 

(2) 

(3) 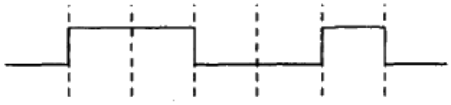

(4) 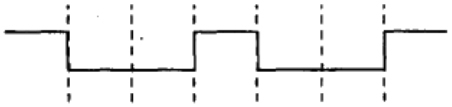

(A) *see figure*
(B) *see figure*
(C) *see figure*
(D) *see figure*

Answer: (A) · Key from source paper

Q230 AIEEE 2008 MCQ

In the circuit below, A and B represent two inputs and C represents the output. The circuit represents
(see the figure above)

Q33. In the circuit below, A and B represent two inputs and C represents the output. The circuit represents

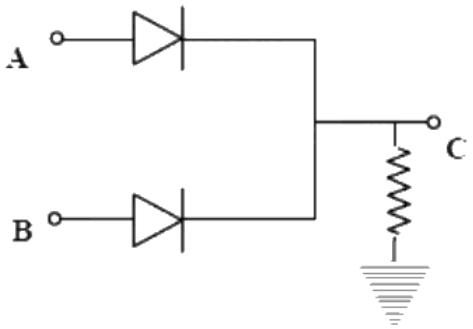

(1) NOR gate
(2) AND gate
(3) NAND gate
(4) OR gate

(A) NOR gate
(B) AND gate
(C) NAND gate
(D) OR gate

Answer: (D) OR gate · Key from source paper

Q231 AIEEE 2007 MCQ

see figure

Q41.

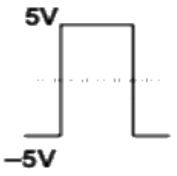

If in a p – n junction diode, a square input signal of 10 V is applied as shown

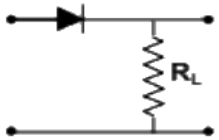

Then the output signal across R_L will be

(1) 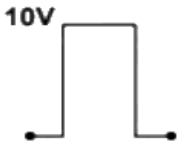

(2) 

(3) 

(4) 

(A) *see figure*
(B) *see figure*
(C) *see figure*
(D) *see figure*

Answer: (D) · Key from source paper

Q232 AIEEE 2007 MCQ

Carbon, silicon and germanium have four valence electrons each. At room temperature which one of the following statements is most appropriate?

(A) The number of free conduction electrons is significant in C but small in Si and Ge.
(B) The number of free conduction electrons is negligible small in all the three.
(C) The number of free electrons for conduction is significant in all the three.
(D) The number of free electrons for conduction is significant only in Si and Ge but small in C.

Answer: (D) The number of free electrons for conduction is significant only in Si and Ge but small in C. · Key from source paper

---

Q233 AIEEE 2006 MCQ

A solid which is transparent to visible light and whose conductivity increases with temperature is formed by

(A) Metallic binding
(B) Ionic binding
(C) Covalent binding
(D) Van der Waals binding

Answer: (C) Covalent binding · Key from source paper

Q234 AIEEE 2006 MCQ

If the ratio of the concentration of electrons that of holes in a semiconductor is $\frac{7}{5}$ and the ratio of currents is $\frac{7}{4}$, then what is the ratio of their drift velocities?

(A) $\frac{4}{7}$
(B) $\frac{5}{8}$
(C) $\frac{4}{5}$
(D) $\frac{5}{4}$

Answer: (D) $\frac{5}{4}$ · Key from source paper

Q235 AIEEE 2006 MCQ

In a common base mode of a transistor, t collector current is 5.488 mA for an emit current of 5.60 mA. The value of the base current amplification factor (β) will be

(A) 48
(B) 49
(C) 50
(D) 51

Answer: (B) 49 · Key from source paper

Q236 AIEEE 2006 MCQ

In the following, which one of the diodes is reverse biased?

(see the figure above)

Q55. In the following, which one of the diodes is reverse biased?

(1)

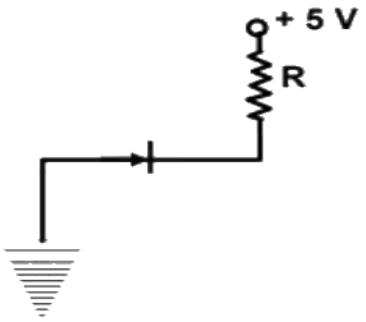

(2)

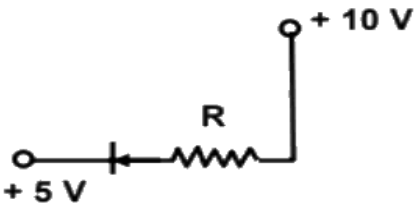

(3)

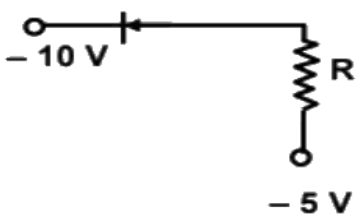

(4)

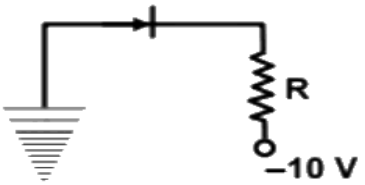

(A) *see figure*
(B) *see figure*
(C) *see figure*
(D) *see figure*

Answer: (A) · Key from source paper

Q237 AIEEE 2006 MCQ

The circuit has two oppositely connect ideal diodes in parallel. What is the current following in the circuit?

(see the figure above)

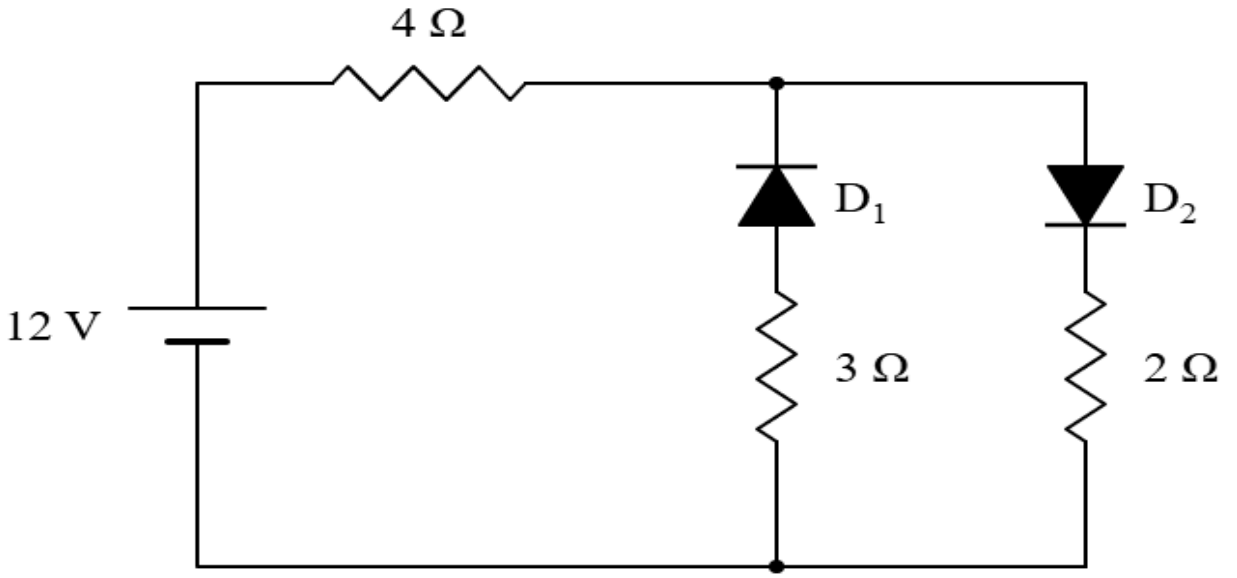

Figure redrawn by EdLoop

(A) 1.33 A
(B) 1.71 A
(C) 2.00 A
(D) 2.31 A

Answer: (C) 2.00 A · Key from source paper

Q238 AIEEE 2005 MCQ

The electrical conductivity of a semiconductor increases when electromagnetic radiation of wavelength shorter than 2480 nm is incident on it. The band gap in (eV) for the semiconductor is

(A) 1.1eV
(B) 2.5eV
(C) 0.5eV
(D) 0.7eV

Answer: (C) 0.5eV · Key from source paper

Q239 AIEEE 2005 MCQ

In a common base amplifier, the phase difference between the input signal voltage and output voltage is

(A) $\frac{\pi}{4}$
(B) π
(C) 0
(D) $\frac{\pi}{2}$

Answer: (C) 0 · Key from source paper

Q240 AIEEE 2005 MCQ

In a full wave rectifier circuit operating from 50 Hz mains frequency, the fundamental frequency in the ripple would be

(A) 50 Hz
(B) 25 Hz
(C) 100 Hz
(D) 70.7 Hz

Answer: (C) 100 Hz · Key from source paper

Q241 AIEEE 2004 MCQ

The manifestation of band structure in solids is due to

(A) Heisenberg's uncertainty principle
(B) Pauli's exclusion principle
(C) Bohr's correspondence principle
(D) Boltzmann's law

Answer: (B) Pauli's exclusion principle · Key from source paper

Q242 AIEEE 2004 MCQ

When npn transistor is used as amplifier

(A) electrons move from base to collector
(B) holes move from emitter to base
(C) electrons move from collector to base
(D) holes move from base to emitter.

Answer: (A) electrons move from base to collector · Key from source paper

Q243 AIEEE 2004 MCQ

For a transistor amplifier in common emitter configuration having load impedance of 1kΩ (h_{fe} = 50 and h_{oe} = 25) the current gain is

(A) -5.2
(B) -15.7
(C) -24.8
(D) -48.78

Answer: (D) -48.78 · Key from source paper

Q244 AIEEE 2004 MCQ

When p-n junction diode is forward biased

(A) the depletion region is reduced and barrier height is increased
(B) the depletion region is widened and barrier height is reduced
(C) both the depletion region and barrier height reduced
(D) both the depletion region and barrier height increased.

Answer: (C) both the depletion region and barrier height reduced · Key from source paper

Q245 AIEEE 2003 MCQ

The difference in the variation of resistance with temperature in a metal and a semiconductor arises essentially due to the difference in the

(A) crystal structure
(B) variation of the number of charge carriers with temperature
(C) type of bonding
(D) variation of scattering mechanism with temperature

Answer: (B) variation of the number of charge carriers with temperature · Key from source paper

Q246 AIEEE 2003 MCQ

In the middle of the depletion layer of a reverse biased p-n junction, the

(A) electric field is zero
(B) potential is maximum
(C) electric field is maximum
(D) potential is zero

Answer: (C) electric field is maximum · Key from source paper

Q247 AIEEE 2002 MCQ

At absolute zero, Si acts as

(A) non metal
(B) metal
(C) insulator
(D) none of these

Answer: (C) insulator · Key from source paper

Q248 AIEEE 2002 MCQ

The energy band gap is maximum in

(A) metals
(B) superconductors
(C) insulators
(D) semiconductors

Answer: (C) insulators · Key from source paper

Q249 AIEEE 2002 MCQ

The part of a transistor which is most heavily doped to produce large number of majority carriers is

(A) emmiter
(B) base
(C) collector
(D) can be any of the above three

Answer: (A) emmiter · Key from source paper

EdLoop JEE